Penny+Giles

A Curtiss-Wright Company

MOTORSPORT MEASUREMENT & CONTROL SENSORS

Innovation In Motion

INNOVATION IN MOTION

For more than 50 years, Penny+Giles has provided creative solutions for position measurement and control. Our success in world markets results from innovative technology, creative design, manufacturing excellence and interactive customer support.

Our experience in providing control and feedback solutions across a wide applications spectrum from aerospace, automotive and motorsport, mining and process control to medical science, broadcasting and recording allows our customers to specify Penny + Giles equipment knowing that it is industry proven in thousands of applications throughout the world.

Penny+Giles sensors are manufactured using state-of-the-art production facilities, which include cell assembly systems, ensuring products are delivered rapidly to meet customers needs.

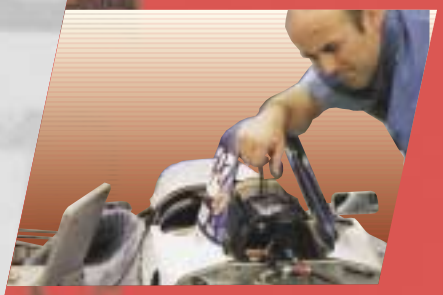

Custom design

Using the Penny+Giles partnership approach integrates our design and product expertise with your design team, enabling a free flow of ideas to provide the most reliable and cost effective product solution.

Standard build

Specify from our wide range of position measurement and control products - many available from stock.

Motorsport

Success in motor racing depends on hundreds of components working together at peak performance under the most extreme conditions. Position sensors are essential for the control and monitoring systems that supply information to race engineers to help trim precious seconds off the lap times.

Penny+Giles have pioneered developments in motorsport position sensors by using experience gained in aerospace applications, where reliability under extremely hostile conditions are paramount.

Penny+Giles sensors have become a benchmark standard in motor racing and have helped every winning team in the Formula 1 championship since 1986.

Aerospace Products

Penny+Giles design and manufacture position sensors for civil and military applications on fixed and rotary wing aircraft and satellite launch vehicles. These products are sold under the Curtiss-Wright Controls, Integrated Sensing brand.

Industrial products

Penny + Giles industrial products are key components throughout the industrialised world providing control and position feedback in a wide range of applications as diverse as construction vehicles and leisure simulators.

Contents

EMC

The products detailed on pages 3 to 12 have been tested to the requirements of EN50081-1 (Emissions) and EN50082-2 (Immunity).

Quality Assurance

Penny+Giles are accredited to BS EN ISO9001:2000

Quality is at the heart of all our systems ensuring the reliability of our products from initial design to final despatch.

Certificate No LRQ 0924881

Penny+Giles

A Curtiss-Wright Company

LINEAR POTENTIOMETERS

The Penny+Giles SLS and MLS range of linear potentiometers have been designed with motorsport applications in mind. They utilise established hybrid track technology to provide low electrical noise and high accuracy output over long operating life in the most extreme environments. With a sealing system tested to IP66 and a choice of mountings, these potentiometers have become the benchmark in suspension data acquisition systems for single seat, saloon car, motorcycle and truck racing.

Features	Benefits
• Compact body to stroke length	• Reduced installation space
• Sealing to IP66 and corrosion resistant rod-end bearings	• Can be used in hostile environments
• Integrally moulded rear cable assembly	• Excellent cable strain relief with secure sealing
• Rotatable shaft	• Easy installation
• Reduced weight	• Ideal for motorsport applications
• Rapid despatch	• Eliminates customer inventory
• CE approved	• Confidence in EMC performance

SLS095 LINEAR DISPLACEMENT SENSOR

SLS095 is designed to provide maximum performance benefits within an extremely compact body diameter of 9.5mm, with stroke lengths from 10 to 100mm. The miniature size of this sensor makes it ideal for applications in robotics, animatronics, medical equipment and motorsport data acquisition.

PERFORMANCE

Electrical stroke E	**mm**	***10***	***20***	***30***	***40***	***50***	***75***	***100***	
Resistance ±10%	**kΩ**	0.4†	0.8	1.2	1.6	2.0	3.0	4.0	†±15% for SLS 095/10
Independent linearity	**±%**	0.5	0.35	0.25	0.25	0.25	0.15	0.15	
Power dissipation at 20˚C	**W**	0.2	0.4	0.6	0.8	1.0	1.5	2.0	
Applied voltage maximum	**Vdc**	8.9	17.9	26	40	44	67	74	
Resolution		Virtually infinite							
Hysteresis (repeatability)		Less than 0.01mm							
Operational temperature	**°C**	–30 to +100							
Output smoothness		To MIL-R-39023 grade C 0.1%							
Insulation resistance		Greater than 100MΩ at 500Vdc							
Operating mode		Voltage divider only - see Circuit Recommendation below							
Wiper circuit impedance		Minimum of 100 x track resistance or 0.5MΩ (whichever is greater)							
Operating force maximum									
sealed	**gf**	300 in horizontal plane							
unsealed	**gf**	100 in horizontal plane							
Life at 250mm per second		Typically greater than 100 million operations (50 x 10^6 cycles) at 25mm stroke length							
Dither life		200 million operations (100 x 10^6 cycles) at ±0.5mm, 60Hz							
Sealing		IP50 standard - IP66 see options							
Shaft seal life		20 million operations (10 x 10^6 cycles)							
Shaft velocity maximum	**m/s**	2.5							
Vibration		RTCA 160D 10Hz to 2kHz (random) @ 4.12g (rms) - all axes							
Shock		40g 6mS half sine							

CIRCUIT RECOMMENDATION

Hybrid track potentiometers feature a high wiper contact resistance, therefore operational checks should be carried out only in the voltage divider mode. Hybrid track potentiometers should be used only as voltage dividers, with a minimum wiper circuit impedance of 100 x track resistance or 0.5MΩ (whichever is greater). Operation with wiper circuits of lower impedance will degrade the output smoothness and affect the linearity.

OPTIONS

IP 66 sealing
Designed to accept integral shaft seal to give IP66 rating

Mounting
Can be supplied with self aligning bearings or a plain body for use with body clamps or flange mounting kit.

ACCESSORIES

Mounting kits
- Body clamp kit - SA200841
- Flange kit - SA200842

AVAILABILITY

All standard configurations can be supplied rapidly from the factory - check with your local supplier for more details

ORDERING CODES

SLS095/..... /..... /..... /.....

- Electrical stroke
- Resistance
- Mounting option R = Self aligning bearing, P = Plain
- Sealing 50 = IP50, 66 = IP66

DIMENSIONS AND MOUNTING OPTIONS

Note: drawings not to scale

SELF ALIGNING BEARING MOUNTING

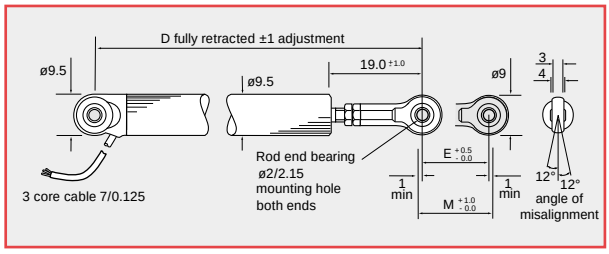

PLAIN BODY MOUNTING

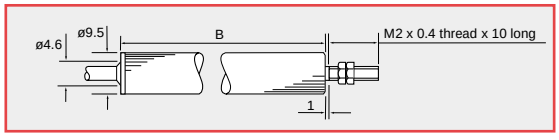

MOUNTING OPTIONS

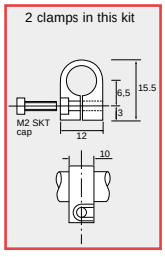

Body clamp
SA200841

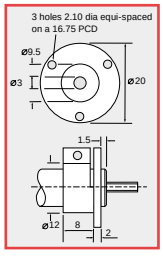

Flange mounting
SA200842

Electrical stroke E	**mm**	**10**	**20**	**30**	**40**	**50**	**75**	**100**
Mechanical stroke M	**mm**	**12.5**	**22.5**	**32.5**	**42.5**	**52.5**	**77.5**	**102.5**
Body length B	**mm**	45.5	55.5	65.5	75.5	85.5	110.5	135.5
Between centres D		70	80	90	100	110	135	160
Weight approximate (mounting option R)	**g**	11	13	14.5	16	17.5	21.5	25.5

ELECTRICAL CONNECTIONS

3 core cable: PUR sheathed 0.3m long with PTFE insulated 7/0.125 cores.

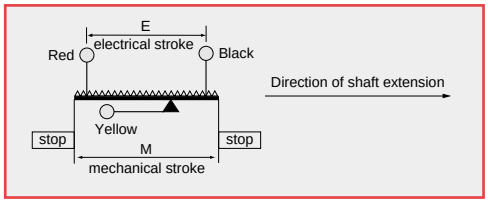

SLS130 LINEAR DISPLACEMENT SENSOR

The SLS130 range is designed to provide performance benefits within a compact, lightweight package in stroke lengths from 25 to 200mm.
With a choice of mounting options and accessories, this sensor is ideally suited to a wide range of industrial applications.

PERFORMANCE

Electrical stroke E	**mm**	***25***	***50***	***75***	***100***	***125***	***150***	***175***	***200***
Resistance ±10%	**kΩ**	1	2	3	4	5	6	7	8
Independent linearity									
guaranteed	**±%**	0.25	0.25	0.15	0.15	0.15	0.15	0.15	0.15
typical	**±%**	0.15	0.15	0.15	0.10	0.10	0.07	0.07	0.07
Power dissipation at 20˚C	**W**	0.5	1.0	1.5	2.0	2.5	3.0	3.5	4.0
Applied voltage maximum	**Vdc**	22	44	67	74	74	74	74	74

Electrical output		Minimum of 0.5% to 99.5% applied volts
Resolution		Virtually infinite
Hysteresis (repeatability)		Less than 0.01mm
Operational temperature	**°C**	–30 to +100 (tested to +130 for 12 hours duration)
Output smoothness		To MIL-R-39023 grade C 0.1%
Insulation resistance		Greater than 100MΩ at 500Vdc
Operating mode		Voltage divider only - see Circuit Recommendation below
Wiper circuit impedance		Minimum of 100 x track resistance or 0.5MΩ (whichever is greater)
Operating force maximum		
sealed	**gf**	500 in horizontal plane
unsealed	**gf**	250 in horizontal plane
Life at 250mm per second		Typically greater than 100 million operations (50 x 10^6 cycles) at 25mm stroke length
Dither life		200 million operations (100 x 10^6 cycles) at ±0.5mm, 60Hz
Sealing		IP50 standard - IP66 see options
Shaft seal life		20 million operations (10 x 10^6 cycles) - replaceable
Shaft velocity maximum	**m/s**	10
Vibration		RTCA 160D 10Hz to 2kHz (random) @12.6g (rms) - all axes
Shock		Less than 0.04% output change @2500g - all axes

CIRCUIT RECOMMENDATION

Hybrid track potentiometers feature a high wiper contact resistance, therefore operational checks should be carried out only in the voltage divider mode. Hybrid track potentiometers should be used only as voltage dividers, with a minimum wiper circuit impedance of 100 x track resistance or 0.5MΩ (whichever is greater). Operation with wiper circuits of lower impedance will degrade the output smoothness and affect the linearity.

OPTIONS

Compact shaft	Compact shaft will reduce dimension D by 25mm
Integral shaft seal - IP 66	Designed to accept integral shaft seal to give IP66 rating
Extended cable length	10m output cable can be specified
Mounting	Body clamp, flange or quick release balljoint mounting kits can be supplied
Protective sleeve	For all stroke lengths - self aligning bearings only. See ordering code
Spring loaded shaft kit	For stroke lengths 25 to 150mm with /L shaft option and /50 sealing option only

ACCESSORIES

Mounting kits
- Body clamp kit - SA200264, Flange kit - SA200266
- Quick release balljoint (Heim) - SA200337

Protective sleeve - SA202984**/..... /.....**
- Shaft L=Long, C=Compact
- Electrical stroke (select to match SLS130 sensor)

Spring loaded shaft kit - SA200265/stroke (For use with option L/50 units only)

AVAILABILITY

All standard configurations can be supplied rapidly from the factory - check with your local supplier for more details

ORDERING CODES

SLS130/...../...../...../...../.....

- Electrical stroke
- Shaft L = long, C = compact
- Sealing 50 = IP50, 66 = IP66
- Cable 1 = 1m, 10 = 10m
- Protective sleeve N=None, P=Fitted

DIMENSIONS AND MOUNTING OPTIONS

Note: drawings not to scale

SELF ALIGNING BEARING MOUNTING

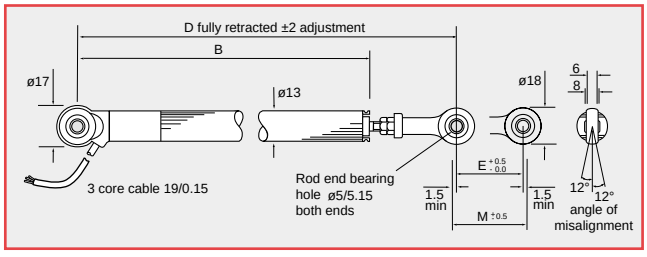

PROTECTIVE SLEEVE OPTION - P

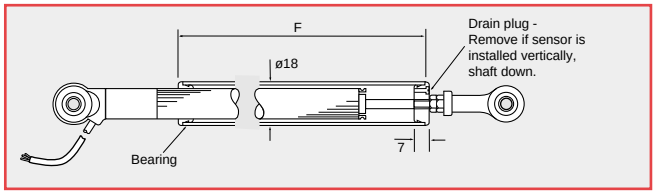

SPRING RETURN OPTION †

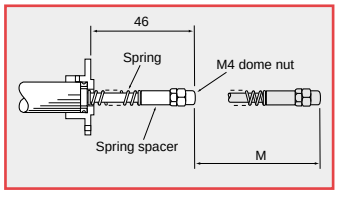

SA200265/stroke

(25 to 150mm stroke lengths and /L/50 options only)

MOUNTING OPTIONS

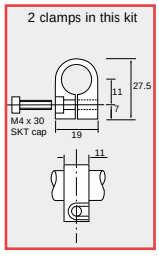

Body clamp

SA200264

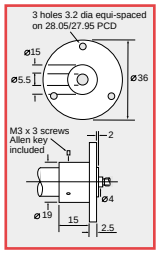

Flange mounting

SA200266

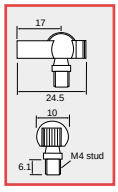

Quick release ball joint

SA200337

Electrical stroke E	**mm**	***25***	***50***	***75***	***100***	***125***	***150***	***175***	***200***
Mechanical stroke M	**mm**	***29***	***54***	***79***	***104***	***129***	***154***	***179***	***204***
Body length B	**mm**	110.5	135.5	160.5	185.5	210.5	235.5	260.5	285.5
Between centres D									
standard sensor (L)	**mm**	173.6	198.6	223.6	248.6	273.6	298.6	323.6	348.6
compact shaft sensor (C)	**mm**	148.6	173.6	198.6	223.6	248.6	273.6	298.6	323.6
Sleeve length F									
standard sensor (L)	**mm**	102	127	152	177	202	227	252	277
compact shaft sensor (C)	**mm**	77	102	127	152	177	202	227	252
Weight approximate									
standard sensor (L)	**g**	64	71	78	85	92	99	106	113
compact shaft sensor (C)	**g**	60	67	74	81	88	95	102	109

ELECTRICAL CONNECTIONS

3 core cable: PUR sheathed 1m long with ETFE insulated 19/0.15 cores.

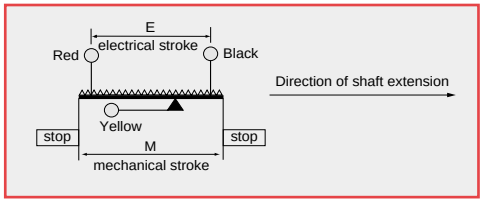

† Body clamp or flange mounting options should be ordered seperately

MLS130 LINEAR DISPLACEMENT SENSOR

The MLS130 sealed linear sensor is designed to provide superior performance within a compact, lightweight package in stroke lengths from 25 to 200mm. With a choice of mounting options, including metal rod end bearings, and an optional protective sleeve for extreme environmental conditions, this sensor is ideally suited to motorsport data acquisition applications on suspension and throttle position feedback, where high performance and reliability with competitive pricing and rapid despatch are vital. The sensor is supplied fully sealed to IP66, with an integrally moulded DR25 sheathed multicore cable.

PERFORMANCE

Electrical stroke E	**mm**	***25***	***50***	***75***	***100***	***125***	***150***	***175***	***200***
Resistance ±10%	**kΩ**	1	2	3	4	5	6	7	8
Independent linearity									
guaranteed	**±%**	0.25	0.25	0.15	0.15	0.15	0.15	0.15	0.15
typical	**±%**	0.15	0.15	0.15	0.10	0.10	0.07	0.07	0.07
Power dissipation at 20˚C	**W**	0.5	1.0	1.5	2.0	2.5	3.0	3.5	4.0
Applied voltage maximum	**Vdc**	22	44	67	74	74	74	74	74
Electrical output		Minimum of 0.5% to 99.5% applied volts							
Resolution		Virtually infinite							
Hysteresis (repeatability)		Less than 0.01mm							
Operational temperature	**°C**	–30 to +100 (tested to +130 for 12 hours duration)							
Output smoothness		To MIL-R-39023 grade C 0.1%							
Insulation resistance		Greater than 100MΩ at 500Vdc							
Operating mode		Voltage divider only - see Circuit Recommendation below							
Wiper circuit impedance		Minimum of 100 x track resistance or 0.5MΩ (whichever is greater)							
Operating force maximum	**gf**	500 in horizontal plane							
Sealing		IP66							
Shaft seal life (replaceable)		20 million operations (10 x 10^6 cycles)							
Sensor track life at 0.25m/s		Greater than 100 million operations (50 x 10^6 cycles) at 25mm stroke length							
Sensor track dither life		200 million operations (100 x 10^6 cycles) at ±0.5mm, 60Hz							
Shaft velocity maximum	**m/s**	10							
Vibration		RTCA 160D 10Hz to 2kHz (random) @ 12.6g (rms) - all axes							
Shock		Less than 0.04% output change @ 2500g - all axes							

CIRCUIT RECOMMENDATION

Hybrid track potentiometers feature a high wiper contact resistance, therefore operational checks should be carried out only in the voltage divider mode. Hybrid track potentiometers should be used only as voltage dividers, with a minimum wiper circuit impedance of 100 x track resistance or 0.5MΩ (whichever is greater). Operation with wiper circuits of lower impedance will degrade the output smoothness and affect the linearity.

OPTIONS

Mounting Metal rod end bearings, quick release balljoints or plain M4 stud

Protective sleeve Available for all stroke lengths

ACCESSORIES

For maximum installation flexibility the following parts are available to purchase separately:

Metal rod end (rear)	P202605
Metal rod end (shaft)	P202604
Quick release balljoint assembly	SA200337
Locknut, M4	X63 - 072 - 340
Protective sleeve assembly	SA202984/stroke/C

A suitable stud lock compound should be used to secure the rear rod end or balljoint assembly.
Use Loctite™ activator 7471 and Loctite™ 648 on metal rod end.
Use Loctite™ 382 on quick release balljoint.

AVAILABILITY

All standard configurations can be supplied rapidly from the factory - check with your local supplier for more details

ORDERING CODES

MLS130/...../...../.....

Electrical stroke

Mounting

Q = Quick release balljoints, R = Metal rod end bearings, S = M4 studs

Protective sleeve N = None, P = Fitted

DIMENSIONS AND MOUNTING OPTIONS

Note: drawings not to scale

QUICK RELEASE BALLJOINTS (Q)

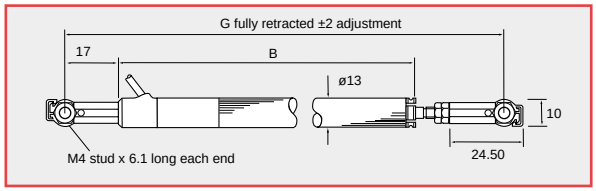

METAL ROD END BEARINGS (R)

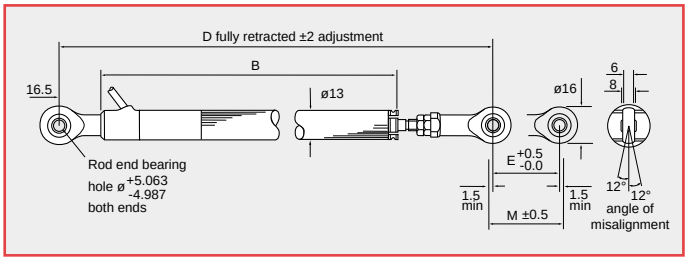

M4 STUD END (S)

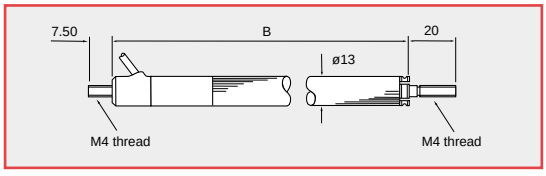

PROTECTIVE SLEEVE (P)

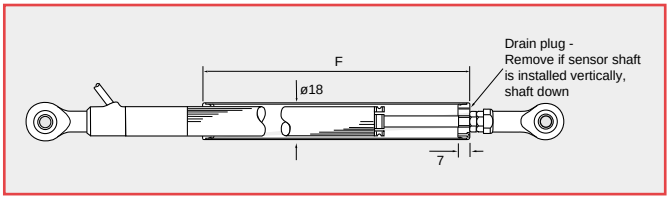

Electrical stroke E	**mm**	***25***	***50***	***75***	***100***	***125***	***150***	***175***	***200***
Mechanical stroke M	**mm**	***29***	***54***	***79***	***104***	***129***	***154***	***179***	***204***
Body length B	**mm**	110.8	135.8	160.8	185.8	210.8	235.8	260.8	285.8
Between centres D	**mm**	164.5	189.5	214.5	239.5	264.5	289.5	314.5	339.5
Between centres G	**mm**	153.6	178.6	203.6	228.6	253.6	278.6	303.6	328.6
Sleeve length F	**mm**	77	102	127	152	177	202	227	252
Weight approximate	**g**	80	87	94	101	108	115	122	129

ELECTRICAL CONNECTIONS

3 core cable: DR25 sheathed 1m long with ETFT insulated 19/0.15 cores.

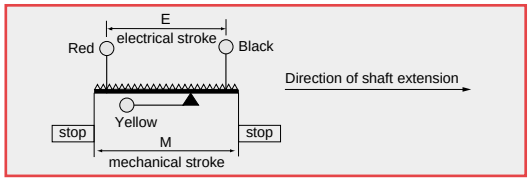

SLS190 LINEAR DISPLACEMENT SENSOR

The SLS190 range is designed to provide maximum performance benefits within a compact package in stroke lengths from 25 to 350mm.
With a choice of mounting options and accessories, this sensor is ideally suited to a wide range of general purpose industrial applications, for medium stroke linear position sensing.

PERFORMANCE

Electrical stroke E	**mm**	***25***	***50***	***75***	***100***	***125***	***150***	***175***	***200***	***225***	***250***	***275***	***300***	***325***	***350***
Resistance ±10%	**kΩ**	1	2	3	4	5	6	7	8	9	10	11	12	13	14
Independent linearity															
guaranteed	**±%**	0.25	0.25	0.15	0.15	0.15	0.15	0.15	0.15	0.15	0.15	0.15	0.15	0.15	0.15
typical	**±%**	0.15	0.15	0.15	0.10	0.10	0.07	0.07	0.07	0.07	0.05	0.05	0.05	0.05	0.05
Power dissipation at 20˚C	**W**	0.5	1.0	1.5	2.0	2.5	3.0	3.5	4.0	4.5	5.0	5.5	6.0	6.5	7.0
Applied voltage maximum	**Vdc**	22	44	67	74	74	74	74	74	74	74	74	74	74	74

Electrical output		Minimum of 0.5% to 99.5% applied volts
Resolution		Virtually infinite
Hysteresis (repeatability)		Less than 0.01mm
Operational temperature	**°C**	–30 to +100 (tested to +130 for 12 hours duration)
Output smoothness		To MIL-R-39023 grade C 0.1%
Insulation resistance		Greater than 100MΩ at 500Vdc
Operating mode		Voltage divider only - see Circuit Recommendation below
Wiper circuit impedance		Minimum of 100 x track resistance or 0.5MΩ (whichever is greater)
Operating force maximum		
sealed	**gf**	500 in horizontal plane
unsealed	**gf**	250 in horizontal plane
Life at 250mm per second		Typically greater than 100 million operations (50 x 10^6 cycles) at 25mm stroke length
Dither life		200 million operations (100 x 10^6 cycles) at ±0.5mm, 60Hz
Sealing		IP50 standard - IP66 see options
Shaft seal life		20 million operations (10 x 10^6 cycles) - replaceable
Shaft velocity maximum	**m/s**	10
Vibration		RTCA 160D 10Hz to 2kHz (random) @ 12.6g (rms) - all axes
Shock		Less than 0.04% output change @ 2500g - all axes

CIRCUIT RECOMMENDATION

Hybrid track potentiometers feature a high wiper contact resistance, therefore operational checks should be carried out only in the voltage divider mode. Hybrid track potentiometers should be used only as voltage dividers, with a minimum wiper circuit impedance of 100 x track resistance or 0.5MΩ (whichever is greater). Operation with wiper circuits of lower impedance will degrade the output smoothness and affect the linearity.

OPTIONS

Compact shaft	Compact shaft will reduce dimension D by 25mm
Integral shaft seal - IP 66	Designed to accept integral shaft seal to give IP66 rating
Extended cable length	10m output cable can be specified
Mounting	Body clamp or flange mounting kits can be supplied
Protective sleeve	For all stroke lengths - self aligning bearings only. See ordering code

ACCESSORIES

Mounting kits
- Body clamp kit - SA59019
- Flange kit - SA59020

Protective sleeve - SA202986**/..../....**
- Shaft L = long, C = compact
- Electrical stroke (select to match SLS190 sensor)

AVAILABILITY

All standard configurations can be supplied rapidly from the factory - check with your local supplier for more details

ORDERING CODES

SLS190/...../...../...../...../.....

- Electrical stroke
- Shaft L = long, C = compact
- Sealing 50 = IP50, 66 = IP66
- Cable 1 = 1m, 10 = 10m
- Protective sleeve N=None, P=Fitted

DIMENSIONS AND MOUNTING OPTIONS

Note: drawings not to scale

SELF ALIGNING BEARING MOUNTING

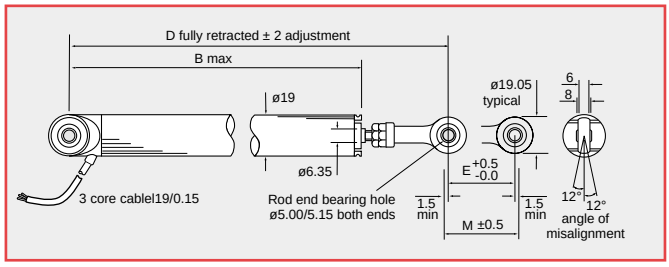

PROTECTIVE SLEEVE OPTION - P

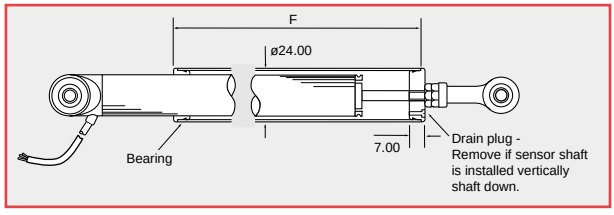

MOUNTING OPTIONS

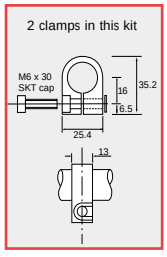

Body clamp
SA59019

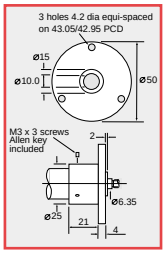

Flange mounting
SA59020

Electrical stroke E	**mm**	***25***	***50***	***75***	***100***	***125***	***150***	***175***	***200***	***225***	***250***	***275***	***300***	***325***	***350***
Mechanical stroke M	**mm**	***29***	***54***	***79***	***104***	***129***	***154***	***179***	***204***	***229***	***254***	***279***	***304***	***329***	***354***
Body length B	**mm**	110.5	135.5	160.5	210.5	235.5	260.5	285.5	310.5	333.5	360.5	385.5	435.5	460.5	485.5
Between centres D															
standard sensor (L)	**mm**	173.6	198.6	223.6	273.6	298.6	323.6	348.6	373.6	398.6	423.6	448.6	498.6	523.6	548.6
compact shaft sensor (C)	**mm**	148.6	173.6	198.6	248.6	273.6	298.6	323.6	348.6	373.6	398.6	423.6	473.6	498.6	523.6
Sleeve length F															
standard sensor (L)	**mm**	100	125	150	200	225	250	275	300	325	350	375	425	450	475
compact shaft sensor (C)	**mm**	75	100	125	175	200	225	250	275	300	325	350	400	425	450
Weight approximate															
standard sensor (L)	**g**	109	126	144	161	179	196	214	231	249	266	284	301	319	336
compact shaft sensor (C)	**g**	103	120	138	155	173	190	208	225	246	260	278	295	316	330

ELECTRICAL CONNECTIONS

3 core cable: PUR sheathed 1m long with ETFE insulated 19/0.15 cores.

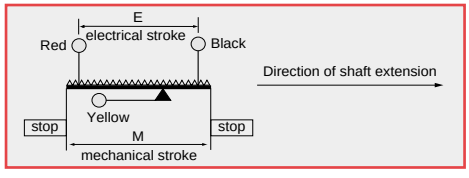

Penny+Giles

A Curtiss-Wright Company

Penny+Giles - one of the world's major suppliers of measurement and control sensors

throttle pedal position

gear select position indication

hydraulic reservoir level

front and rear suspension movement

throttle actuator position

steering angle position

gearbox actuator position

clutch pedal position

clutch actuator position

brake balance measurement

brake pad/disc wear indication

Penny+Giles

A Curtiss-Wright Company

LVDT DISPLACEMENT TRANSDUCERS

The Penny+Giles high performance ratiometric LVDTs benefit from our extensive experience in fly-by-wire control systems for flight critical aerospace applications. Using high integrity coil, screen and connection assemblies, combined with welded and vacuum brazed stainless steel construction, these LVDTs can be supplied in a range of shaft and body configurations to suit clutch, gearbox, engine and brake applications.

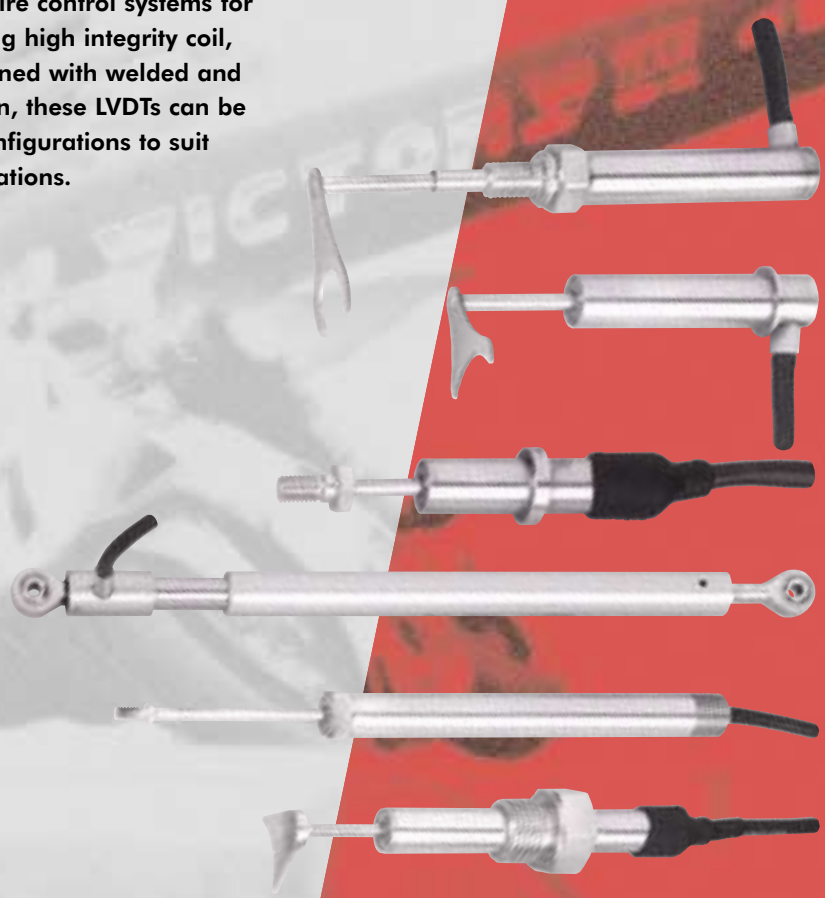

Features	Benefits
• No contact between the sensing elements	• Virtually infinite life and fast dynamic response
• Infinite resolution	• All displacement will be sensed
• Small transducer body length to stroke ratio	• Minimal operational footprint and weight
• Welded and vacuum brazed stainless steel construction	
• Sealed to IP66	• Maximum reliability in hostile environments
• Temperature range -55 to +200°C	
• High integrity coil, screen and connection assemblies	
• Screened and sheathed interface cable	• High performance in electrically noisy environments
• Temperature error less than 35ppm/°C	• Maximises system accuracy

AF111 LVDT

The AF111 range of high accuracy LVDT displacement transducers have been designed primarily for use in the ratiometric configuration and have a compact size, with stroke lengths from 5mm to 150mm. Suitable for clamp mounting, the AF111 range has a threaded, unguided core assembly to simplify installation. Suited to numerous applications, such as vehicle research, and test rigs.

PERFORMANCE

Electrical stroke E	**mm**	***5***	***15***	***25***	***50***	***75***	***100***	***125***	***150***
	±	***2.5***	***7.5***	***12.5***	***25.0***	***37.5***	***50.0***	***62.5***	***75.0***
Input voltage and frequency		1 to 10VRMS at 400Hz to 12.5kHz (sinewave)							
Insulation resistance		Greater than 100MΩ at 500Vdc							
Operational temperature	**°C**	-35 to +125							
Storage temperature	**°C**	-55 to +135							
Vibration		RTCA/DO - 160C, Section 8, Fig 8 - 1 Curve C (Random), 10 - 2000Hz, 4.12g rms							
		RTCA/DO - 160C, Section 8, Fig 8 - 3 Curve L (Sine), 10 - 2000Hz, 3g rms							
Environmental protection		IP66							
Electrical output R proportional to position		$R = \frac{Va - Vb}{Va + Vb}$							
Electrical output R at extremes from null	**±1% total stroke**	0.3	0.3	0.4	0.4	0.6	0.6	0.6	0.6
Non-linearity	**±% total stroke**	0.25	0.25	0.25	0.25	0.25	0.125	0.125	0.125
Secondary coil output voltage		3.3VRMS maximum							
Input impedance		Greater than 300Ω							
Load resistance (per coil)		Greater than 50kΩ (non reactive)							
Temperature error maximum	**% total stroke/°C**	0.0012	0.0012	0.0012	0.0018	0.0018	0.0035	0.0030	0.0030

OUTPUT SCHEMATIC

Ratiometric configuration

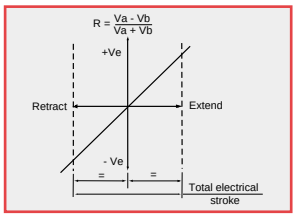

DIMENSIONS

Note: drawings not to scale

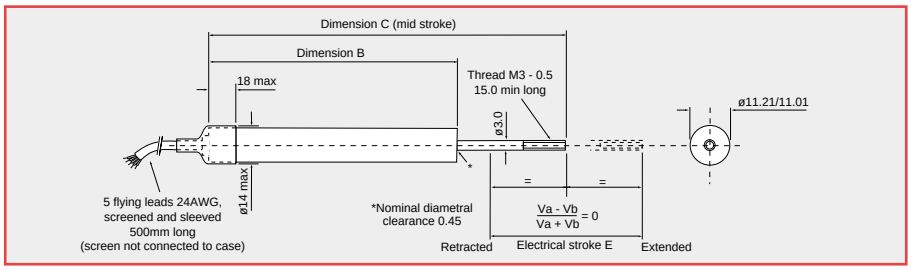

Electrical stroke E	**mm**	***5***	***15***	***25***	***50***	***75***	***100***	***125***	***150***
Mechanical stroke M (non captive shaft)	**mm**	***9***	***19***	***29***	***54***	***79***	***104***	***129***	***154***
Dimension B	**mm**	55	65	80	105	150	175	215	240
Dimension C	**mm**	75	90	110	147.5	205	242.5	295	332.5
Weight (maximum)	**g**	45	50	55	67	90	100	120	140

AVAILABILITY

Normally available from stock

ORDERING CODE

AF111/.....

Electrical stroke (total) mm

ELECTRICAL CONNECTIONS

See AF145 page 15

AF145 LVDT

The AF145 range of high accuracy LVDT displacement transducers have been designed primarily for use in the ratiometric configuration, and have a compact size, with stroke lengths from 5mm to 150mm. The AF145 has self-aligning rod end bearing mounting, with an outer sliding sleeve which protects the movable core whilst enhancing the rigidity of the transducer during operation. Suited to harsh automotive and industrial environments.

PERFORMANCE

Electrical stroke E	**mm**	***5***	***15***	***25***	***50***	***75***	***100***	***125***	***150***
	±	***2.5***	***7.5***	***12.5***	***25.0***	***37.5***	***50.0***	***62.5***	***75.0***
Input voltage and frequency		1 to 10VRMS at 400Hz to 12.5kz (sinewave)							
Insulation resistance		Greater than 100MΩ at 500Vdc							
Operational temperature	**°C**	-35 to +125							
Storage temperature	**°C**	-55 to +135							
Vibration		RTCA/DO - 160C, Section 8, Fig 8 - 1 Curve C (Random), 10 - 2000Hz, 4.12g rms							
		RTCA/DO - 160C, Section 8, Fig 8 - 3 Curve L (Sine), 10 - 2000Hz, 3g rms							
Environmental protection		IP66							
Electrical output R proportional to position		$R = \frac{Va - Vb}{Va + Vb}$							
Electrical output R at extremes from null	**±1% total stroke**	0.3	0.3	0.4	0.4	0.6	0.6	0.6	0.6
Non-linearity	**±% total stroke**	0.25	0.25	0.25	0.25	0.25	0.125	0.125	0.125
Secondary coil output voltage		3.3VRMS maximum							
Input impedance		Greater than 300Ω							
Load resistance (per coil)		Greater than 50kΩ (non reactive)							
Temperature error maximum	**% total stroke/°C**	0.0012	0.0012	0.0012	0.0020	0.0020	0.0030	0.0030	0.0030

OUTPUT SCHEMATIC

See AF111 page 14

DIMENSIONS

Note: drawings not to scale

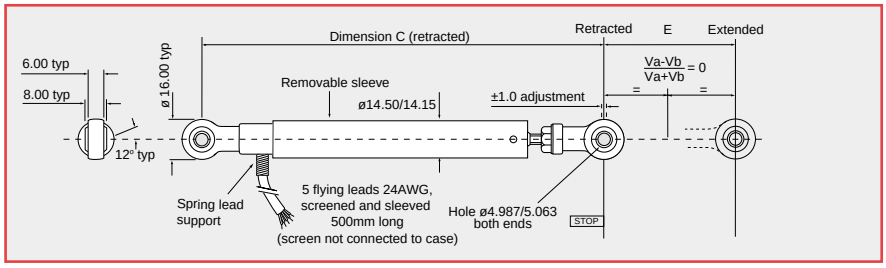

Electrical stroke E	**mm**	***5***	***15***	***25***	***50***	***75***	***100***	***125***	***150***
Mechanical stroke M (non captive shaft)	**mm**	***9***	***19***	***29***	***54***	***79***	***104***	***129***	***154***
Dimension C retracted	**mm**	100	110	125	150	195	220	260	285
Weight (maximum)	**g**	65	80	90	115	155	175	200	220

AVAILABILITY

Normally available from stock

ORDERING CODE

AF145/.....

Electrical stroke (total) mm

ELECTRICAL CONNECTIONS

5 flying leads 24AWG, screened and sleeved 500mm long

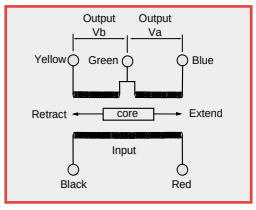

Phasing notes

With blue and black leads common, the output on the yellow lead will be in-phase with the red lead (input) as the shaft retracts from the null position.

Ø8mm LVDT SPECIAL

This specially developed ac LVDT is an example of our capability in producing an extremely compact size (8mm diameter) with a minimal footprint (20mm stroke within a 44mm body length). This LVDT is also suitable for continuous operation at temperatures up to +200°C and is ideally suited for use in clutch position and brake caliper position measurement in the premier classes of motor sport. For optimum performance this LVDT is designed to operate in the ratiometric configuration.

PERFORMANCE

Electrical stroke E	**mm**	**20**
	±	**10**
Input voltage and frequency		3VRMS at 5kHz (sinewave)
Insulation resistance		Greater than 20MΩ at 500Vdc
Operational temperature	**°C**	-55 to +200
Environmental protection		IP66
Electrical output R proportional to position		$R = \frac{Va - Vb}{Va + Vb}$
Electrical output R at extremes from null	**±1% total stroke**	0.441
Non-linearity	**±% total stroke**	1
Ratiometric sensitivity per mm	**±3%**	0.0441
Summed output voltage (Va+Vb)	**±20%**	0.7V/V
Total stroke ratio		0.882
Input impedance		Greater than 150Ω
Load resistance (per coil)		Greater than 50kΩ (non reactive)
Temperature error maximum	**% total stroke/°C**	0.0030

OUTPUT SCHEMATIC

Ratiometric configuration

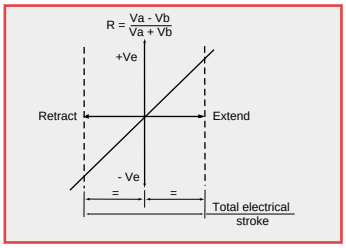

ac output schematic

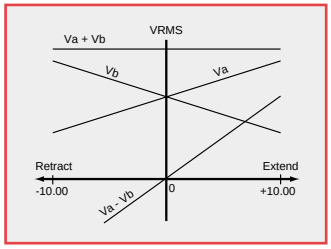

AVAILABILITY

Please consult our sales office for details

ORDERING CODE

Please consult our sales office for details

DIMENSIONS

Note: drawings not to scale

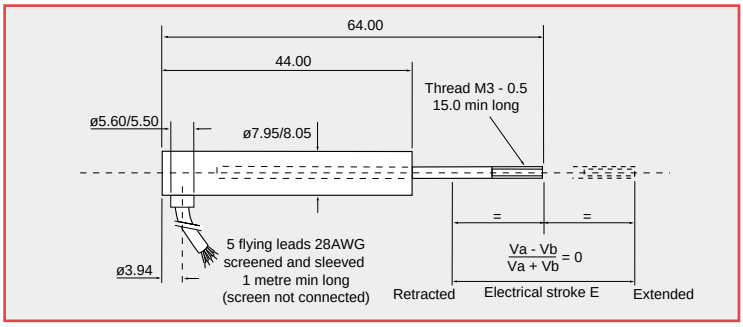

Electrical stroke E	**mm**	**20**
Mechanical stroke M (non captive shaft)	**mm**	**22**
Weight (maximum)	**g**	47 (15g for sensor and core only)

Ø11mm LVDT SPECIAL

This high accuracy LVDT displacement transducer has been designed for use in the ratiometric configuration and has a compact size, with stroke lengths from 25mm to 75mm. This design has self-aligning rod end bearing mounting and features an outer sliding sleeve which protects the movable core whilst enhancing the rigidity of the transducer during operation. Suited to suspension and throttle position feedback applications in premier classes of motorsport.

PERFORMANCE

Electrical stroke E	**mm**	***25***	***50***	***75***
	±	**12.5**	**25.0**	**37.5**
Input voltage and frequency		3VRMS at 2.5kHz (sinewave)		
Insulation resistance		Greater than 20MΩ at 500Vdc		
Operational temperature	**°C**	-30 to +130		
Storage temperature	**°C**	-55 to +135		
Environmental protection		IP66		
Electrical output R proportional to position		$R = \frac{Va - Vb}{Va + Vb}$		
Electrical output R at extremes from null	**±1% total stroke**	0.5	0.5	0.5
Non-linearity	**±% total stroke**	0.5	0.5	0.5
Ratiometric sensitivity per mm		0.04	0.02	0.0133
Summed output voltage (Va+Vb)	**±20%**	0.641	0.872	0.761
Input impedance		Greater than 200Ω		
Load resistance (per coil)		Greater than 50kΩ (non reactive)		
Temperature error maximum	**% total stroke/°C**	0.0030		

OUTPUT SCHEMATIC

See Ø8mm Special LVDT output schematic, page 16

AVAILABILITY

Please consult our sales office for details

ORDERING CODE

D45371/.....

Electrical stroke (total) mm

DIMENSIONS

Note: drawings not to scale

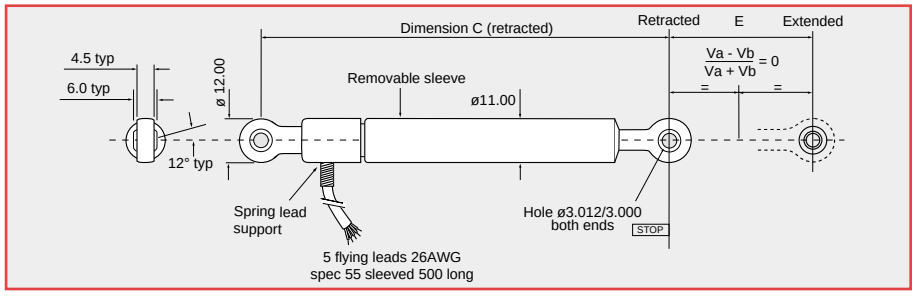

Electrical stroke E	**mm**	***25***	***50***	***75***
Mechanical stroke M (non captive shaft)	**mm**	***27***	***52***	***77***
Dimension C retracted	**mm**	115	135	180
Weight (maximum)	**g**	42	52	68

ELECTRICAL CONNECTIONS

SPECIAL Ø8mm

5 flying leads 28AWG, screened and sleeved 1000mm long

SPECIAL Ø11mm

5 flying leads 26AWG, screened and sleeved 500mm long

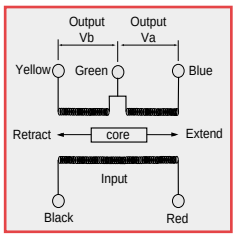

Ratiometric connection configuration

Phasing notes

With blue and black leads common, the output on the yellow lead will be in-phase with the red lead (input) as the shaft retracts from the null position.

Penny+Giles

A Curtiss-Wright Company

CONTACTLESS ROTARY POSITION SENSORS

Innovation In Motion

Innovative, rugged designs - superior protection

All models in our range have been designed to offer the best combination of materials and mounting styles that ensure survivability in the most rugged applications. We use sealing systems and cable connections that offer superior protection against the most hostile of operating conditions.

Impressive environmental capability

Designed with 21st century applications in mind most of our models can withstand operating temperatures from -40°C to +140°C (+170°C for 72 hours with our NRH and TPS models) and have been tested to withstand severe shock and vibration. All sensors have protection to at least IP68 rating, with some models offering protection to IP69K. With an EMC immunity of 100V/m, these position sensors are ready for the harshest applications.

Superior performance

This range of sensors has an impressive performance specification and most can operate from a 5Vdc regulated or 9 – 30Vdc supply.

Outputs can be PWM or analog voltage (nominal 0.5 - 4.5Vdc) over the measurement range, with clockwise or anticlockwise shaft rotation. A choice of 341 different electrical angles from 20° to 360° are possible. 12 bit resolution (0.025%) is available over the selected measuring range, with a non-linearity better than ±0.4% and temperature stability better than ±50ppm/°C. The sensor's analog output option has a very low output noise level of less than 1mV rms.

World leading availability

All models have been 'designed for manufacture' which enables assembly in state-of-the-art manufacturing cells. This means that we can supply any of the configurations possible from the options offered, in a matter of days from ordering. This allows OEMs to reduce or eliminate their inventory, and call on Penny+Giles to supply 'on demand'.

*Performance assured**

Penny+Giles product development process includes exhaustive qualification testing to ensure that performance specifications published in our product brochures and technical data sheets are backed by real-life test evidence. This is our assurance to you that our designs have been tested at these parameters.

* The qualification and suitability of these products in any customer specific application is the responsibility of the customer, unless otherwise agreed with Penny+Giles.

Selection Guide

Penny+Giles offers the widest choice of options to suit your unique application. We can also offer a custom design service if one of our standard models does not suit your requirements.

NRH280DP

- **Dual output**
- **6.5mm deep with metal flange**
- **Separate magnet assembly**
- **Sealed to IP69K**
- **Raychem™ DR25 cable**

page 4

NRH285DR

- **Dual input/dual output version of NRH280DP**
- **5Vdc operation only**

page 7

SRH220DR

- **Dual input/dual output**
- **28 x 38mm body with crush proof flange**
- **Sealed to IP68**
- **Integrated connector**

page 10

SRH280P

- **Single output**
- **28mm body with crush proof flange**
- **Three shaft styles**
- **Sealed to IP68**

page 13

SRH280DP

- **Dual output**
- **Raychem™ DR25 cable**
- **28mm body with crush proof flange**
- **Three shaft styles**
- **Sealed to IP68**

page 16

TPS280DP

- **Dual output**
- **D drive**
- **Sealed to IP68**
- **25mm body with crush proof flange**
- **Raychem™ DR25 cable+connector**

page 19

SRH501P

- **Single output**
- **87.5mm mounting flange**
- **Marine grade alloy housing**
- **Sealed to IP69K**

page 22

SRH502P

- **Dual output**
- **87.5mm mounting flange**
- **Marine grade alloy housing**
- **Sealed to IP69K**

page 22

SRH880P

- **Single output**
- **88 mm body**
- **Aluminum or stainless steel housing**
- **Sealed to IP68M**

page 27

NRH280DP

dual output no contact rotary sensor

PERFORMANCE

ELECTRICAL

Measurement range	°	20 to 360 in 1° increments
Supply voltage	Vdc	9 to 30 (unregulated) and 5 ±0.5 (regulated)
Over voltage protection	Vdc	Up to 40 (-40 to +60°C)
Maximum supply current	mA	<25
Reverse polarity protection		Yes
Short circuit protection		
Output to GND		Yes
Output to supply		In 5V regulated mode only
Power-on settlement time	S	<1
Resolution	%	0.025 of measurement range (12 bit)
Non-linearity*	%	<±0.4
Temperature coefficient	ppm/°C	<±30 in 5V supply mode; <±90 in 9-30V supply mode

*Non-linearity is measured using the least-squares method on a computerised calibration system

Analog Output (order code A1, A4) – see graph on page 31

Voltage output range		
9-30V supply	Vdc	Absolute voltage, 0.5 to 4.5 (A1) or 0.1 to 4.9 (A4) over measurement range (±3%)
5V supply	Vdc	Ratiometric output voltage - 10 to 90% (A1) or 2 to 98% (A4) of Vs over measurement range (±1%)
Monotonic range	Vdc Vdc	0.25 (5%) and 4.75 (95%) nominal (A1) 0.05 (1%) and 4.95 (99%) nominal (A4)
Load resistance	Ω	10k minimum (resistive to GND)
Output noise	mVrms	<1
Input/output delay	mS	<2

PWM Output (order code Pn) – see output characteristics on page 31

PWM frequency	Hz	244 (P1); 500 (P2); or 1000 (P3) ±20% over temperature range
PWM levels 9-30V supply	Vdc	0 and 5 nominal (±3%)
5V supply	Vdc	0 and Vs (±1%)
Duty cycle	%	10 to 90 over measurement range
Monotonic range	%	5 and 95 nominal
Load resistance	Ω	10k minimum (resistive to GND)
Rise/fall time	µS	<15

MECHANICAL

Mechanical angle	°	360, continuous
Maximum rotational speed	°/sec	3600
Weight	g	<55 (with bolt type magnet carrier)
Mounting		Use 2 x M4 socket head cap screws and M4 washer - maximum tightening torque 2Nm. Bolt (B) or plug (P) type magnet holders are available for the customer to assemble to their own equipment. We also offer a magnet only (M) option for OEM's to integrate into their design.
Phasing		When magnet ident mark is facing toward the sensor and cable exit, output is at mid travel. The sensor housing allows for ±10° adjustment via the mounting flange slots.

ENVIRONMENTAL

Protection class		IP68 (to 2m depth for 2 hours) and IP69K
Life		This product has no contacting parts.
Dither life		Contactless - no degradation due to shaft dither
Operational temperature†	**°C**	-40 to +140 (5V supply) and +170°C for 72 hours
		-40 to +135.2 (9V supply option) Derate upper temperature limit by 1.7°C for every 1V increase in supply: e.g. -40 to +100 @30V
Storage temperature	**°C**	-55 to +140
Vibration		BS EN 60068-2-64:1995 Sec 8.4 (31.4gn rms) 20 to 2000Hz Random
Shock		3m drop onto concrete and 2500g
EMC Immunity level		BS EN 61000-4-3:1999, to 100V/m, 80MHz to 1GHz and 1.4GHz to 2.7GHz (2004/108/EC)

† See Maximum Operating Temperature – derating graph on page 30.
If the maximum operating temperature is exceeded, the voltage regulator will shut down to protect the device from overheating

OPTIONS

Measurement range (angle)		Select from 20° to 360° in 1° increments (factory programmed) for each output channel
Output		Analog voltage (An) or PWM (Pn)
Output direction		Both clockwise, both anticlockwise or one CW, one ACW
Magnet holder		Bolt (B) or plug (P) types, or magnet only (M)
Cable length	**m**	0.5
OEM options		Outputs can be programmed to provide: non linear laws; switch outputs; clamp voltages; different output phasing CH1/CH2; faster input/output delay; extended analog range; and output mapping for potentiometer replacements.

AVAILABILITY

All standard configurations can be supplied rapidly from the factory – check with your local supplier for more details

ORDERING CODES

NRH280DP/...../...../...../...../...../.....

Measurement range	CH1 = angle in °
Measurement range	CH2 = angle in °
Output	A1 = Analog 0.5-4.5Vdc A4 = Analog 0.1-4.9Vdc P1 = PWM, 244Hz P2 = PWM, 500Hz P3 = PWM, 1000Hz
Direction	3 = Both clockwise 4 = Both anticlockwise 5 = CH1 CW; CH2 ACW
Magnet holder	B = Bolt type P = Plug type M = Magnet only
Cable length	P5 = 0.5m

NRH280DP

DIMENSIONS

Note: drawings not to scale

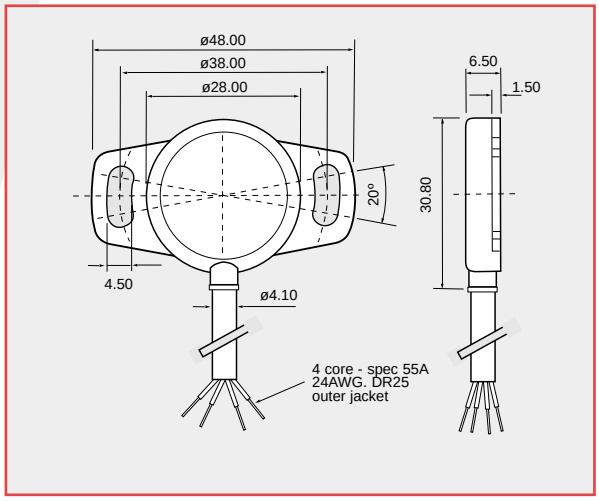

MAGNET HOLDER OPTIONS

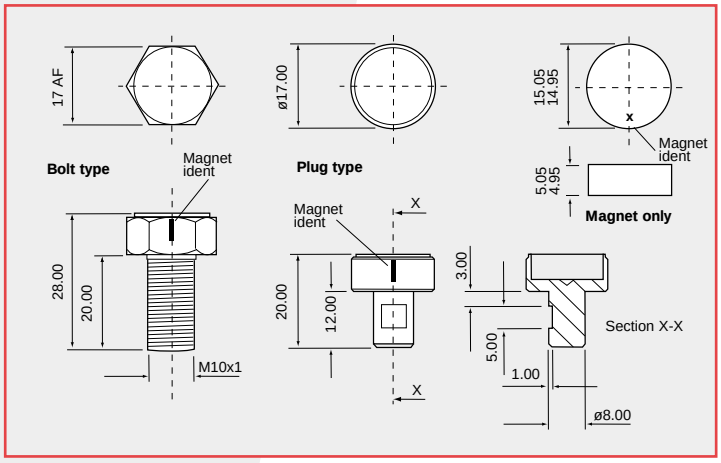

ELECTRICAL ANGLE

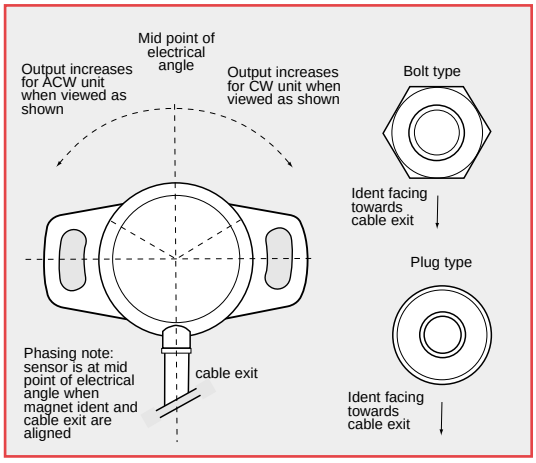

MAGNET MISALIGNMENT

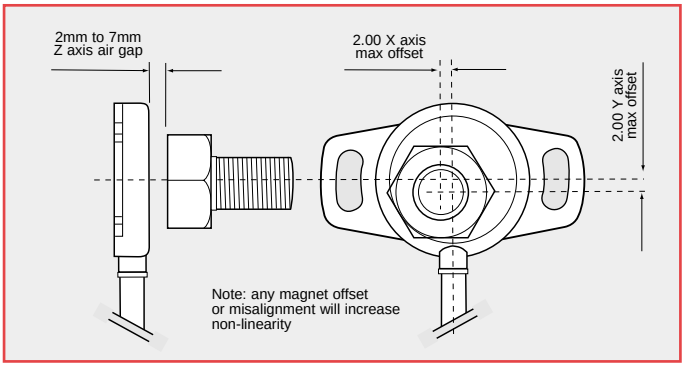

ELECTRICAL CONNECTIONS

500mm of 4-core cable: FDR-25 sheathed, with 55A spec (24AWG) cores

Cable colour	Description
Red	+V Supply
Yellow	Output 1
White	Output 2
Black	0V Supply (GND)

Output increases with CW or ACW rotation viewed on sensor face - depending on selected order code

When connecting the sensor, care should be taken with the correct connections. The sensor is provided with reverse polarity protection and short circuit protection between outputs (Yellow & White) to GND (Black), **but if the outputs (Yellow & White) are connected to the supply this will result in device failure.**

NRH285DR DUAL REDUNDANT OUTPUT

no contact rotary sensor – 5Vdc operation only

PERFORMANCE

ELECTRICAL

Measurement range	**°**	20 to 360 in 1° increments
Supply voltage	**Vdc**	5 ±0.5 (regulated) to each independent sensor channel
Over voltage protection	**Vdc**	Up to 10 (-40 to +60°C)
Maximum supply current	**mA**	<12.5 each independent supply (<25 total)
Reverse polarity protection		Yes
Short circuit protection		
Output to GND		Yes
Output to supply		Yes
Power-on settlement time	**S**	<1
Resolution	**%**	0.025 of measurement range (12 bit)
Non-linearity*	**%**	<±0.4
Temperature coefficient	**ppm/°C**	<±30

* Non-linearity is measured using the Least-Squares method on a computerised calibration system

Analog Output (order code A1, A4) – see graph on page 31

Voltage output range	**Vdc**	Ratiometric output voltage - 10 to 90% (A1) or 2 to 98% (A4) of Vs over measurement range (±1%)
Monotonic range	**Vdc** **Vdc**	0.25 (5%) and 4.75 (95%) nominal (A1) 0.05 (1%) and 4.95 (99%) nominal (A4)
Load resistance	**Ω**	10k minimum (resistive to GND)
Output noise	**mVrms**	<1
Input/output delay	**mS**	<2

PWM Output (order code Pn) – see output characteristics on page 31

PWM frequency	**Hz**	244 (P1); 500 (P2); or 1000 (P3) ±20% over temperature range
PWM levels 5V supply	**Vdc**	0 and Vs (±1%)
Duty cycle	**%**	10 to 90 over measurement range
Monotonic range	**%**	5 and 95 nominal
Load resistance	**Ω**	10k minimum (resistive to GND)
Rise/fall time	**µS**	<15

MECHANICAL

Mechanical angle	**°**	360, continuous
Maximum rotational speed	**°/sec**	3600
Weight	**g**	<55 (with bolt type magnet carrier)
Mounting		Use 2 x M4 socket head cap screws and M4 washer - maximum tightening torque 2Nm. Bolt (B) or plug (P) type magnet holders are available for the customer to assemble to their own equipment. We also offer a magnet only (M) option for OEM's to integrate into their design.
Phasing		When magnet ident mark is facing toward the sensor and cable exit, output is at mid travel. The sensor housing allows for ±10° adjustment via the mounting flange slots.

NRH285DR

ENVIRONMENTAL

Protection class		IP68 (to 2m depth for 2 hours) and IP69K
Life		This product has no contacting parts.
Dither life		Contactless - no degradation due to shaft dither
Operational temperature[≠]	**°C**	-40 to +140 and +170°C for 72 hours
Storage temperature	**°C**	-55 to +140
Vibration		BS EN 60068-2-64:1995 Sec 8.4 (31.4gn rms) 20 to 2000Hz Random
Shock		3m drop onto concrete and 2500g
EMC Immunity level		BS EN 61000-4-3:1999, to 100V/m, 80MHz to 1GHz and 1.4GHz to 2.7GHz (2004/108/EC)

[≠] If the maximum operating temperature is exceeded, the voltage regulator will shut down to protect the device from overheating

OPTIONS

Measurement range (angle)		Select from 20° to 360° in 1° increments (factory programmed) for each output channel
Output		Analog voltage (An) or PWM (Pn)
Output direction		Both clockwise, both anticlockwise or one CW, one ACW
Magnet holder		Bolt (B) or plug (P) types, or magnet only (M)
Cable length	**m**	0.5
OEM options		Outputs can be programmed to provide: non linear laws; switch outputs; clamp voltages; different output phasing CH1/CH2; faster input/output delay; extended analog range; and output mapping for potentiometer replacements.

AVAILABILITY

All standard configurations can be supplied rapidly from the factory – check with your local supplier for more details

ORDERING CODES

NRH285DR/ ..... / ..... / ..... / ..... / ..... / .....

Measurement range	CH1 = angle in °
Measurement range	CH2 = angle in °
Output	A1 = Analog 0.5-4.5Vdc A4 = Analog 0.1-4.9Vdc P1 = PWM, 244 Hz P2 = PWM, 500 Hz P3 = PWM, 1000 Hz
Direction	3 = Both clockwise 4 = Both anticlockwise 5 = CH1 CW; CH2 ACW
Magnet holder	B = Bolt type P = Plug type M = Magnet only
Cable length	P5 = 0.5m

DIMENSIONS

Note: drawings not to scale

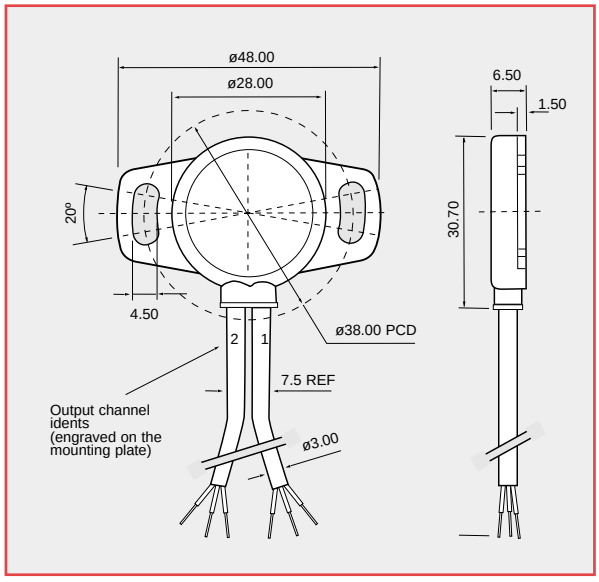

MAGNET HOLDER OPTIONS

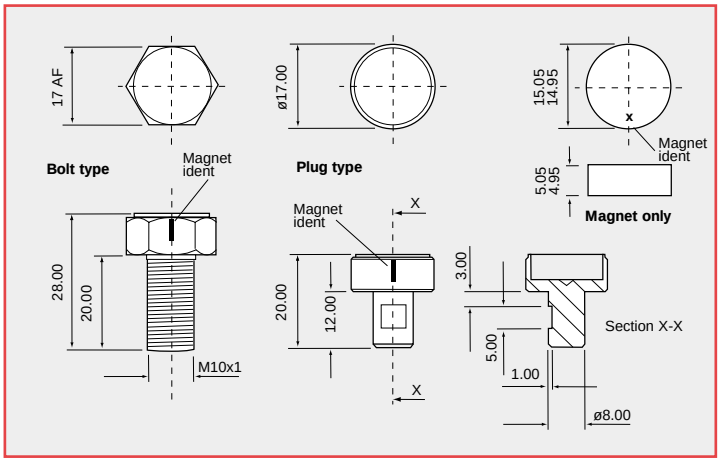

ELECTRICAL ANGLE

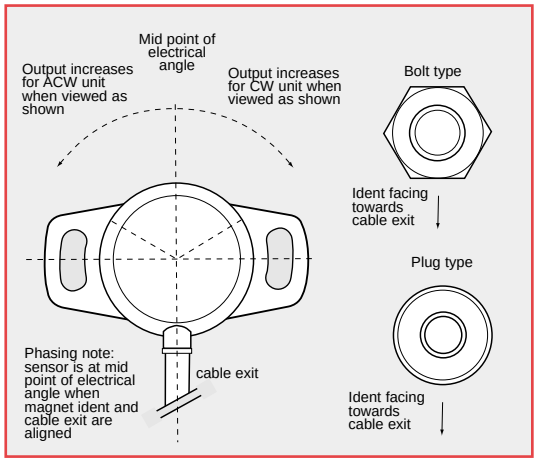

MAGNET MISALIGNMENT

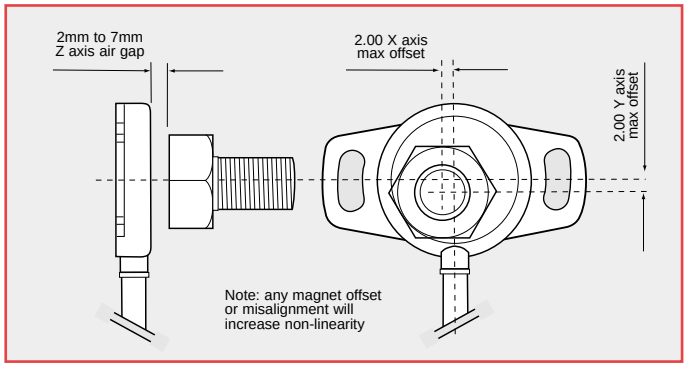

ELECTRICAL CONNECTIONS

2 x 500mm of 3-core cable: FDR-25 sheathed, with 55A spec (24AWG) cores

Cable colour *	Description
Red	+V Supply
Yellow	Output 1+2
Black	0V Supply (GND)

Output increases with CW or ACW rotation viewed on sensor face - depending on selected order code

*Cables are identified on the mounting plate. 1 = CH1, 2 = CH2

When connecting the sensor, care should be taken with the correct connections. The sensor is provided with reverse polarity protection and short circuit protection between outputs (Yellow) to GND (Black) and outputs to supply (Red) on NRH 285DR model only.

SRH280P SINGLE OUTPUT

contactless rotary sensor

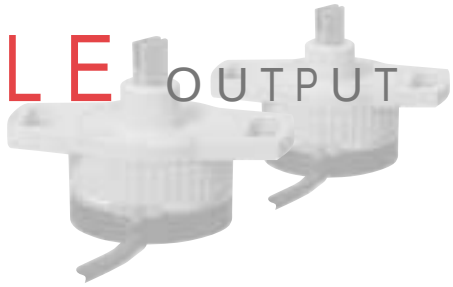

PERFORMANCE

ELECTRICAL

Measurement range	**°**	20 to 360 in 1° increments
Supply voltage	**Vdc**	9 to 30 (unregulated) and 5 ±0.5 (regulated)
Over voltage protection	**Vdc**	Up to 40 (-40 to +60°C)
Maximum supply current	**mA**	<12.5
Reverse polarity protection		Yes
Short circuit protection		
Output to GND		Yes
Output to supply		In 5V regulated mode only
Power-on settlement time	**S**	<1
Resolution	**%**	0.025 of measurement range (12 bit)
Non-linearity*	**%**	<±0.4
Temperature coefficient	**ppm/°C**	<±50

*Non-linearity is measured using the least-squares method on a computerised calibration system

Analog Output (order code A1, A4) – see graph on page 31

Voltage output range		
9-30V supply	**Vdc**	Absolute voltage, 0.5 to 4.5 (A1) or 0.1 to 4.9 (A4) over measurement range (±3%)
5V supply	**Vdc**	Ratiometric output voltage - 10 to 90% (A1) or 2 to 98% (A4) of Vs over measurement range (±1%)
Monotonic range	**Vdc**	0.25 (5%) and 4.75 (95%) nominal (A1)
	Vdc	0.5 (1%) and 4.95 (99%) nominal (A4)
Load resistance	**Ω**	10k minimum (resistive to GND)
Output noise	**mVrms**	<1
Input/output delay	**mS**	<2

PWM Output (order code P) – See output characteristics on page 31

PWM frequency	**Hz**	244 (P1); 500 (P2); or 1000 (P3) ±20% over temperature range
PWM levels 9-30V supply	**Vdc**	0 and 5 nominal (±3%)
5V supply	**Vdc**	0 and Vs (±1%)
Duty cycle	**%**	10 to 90 over measurement range
Monotonic range	**%**	5 and 95 nominal
Load resistance	**Ω**	10k minimum (resistive to GND)
Rise/fall time	**µS**	<15

MECHANICAL

Mechanical angle	**°**	360, continuous
Operating torque - maximum		
sealed shaft IP68	**g-cm**	120
unsealed shaft IP50	**g-cm**	100
Shaft velocity maximum	**°/sec**	3600
Weight	**g**	<35
Mounting		Use 2 x M4 socket head cap screws and M4 washer - maximum tightening torque 2Nm
Phasing		When shaft flat (or shaft ident mark) is facing toward the cable exit, output is at mid travel. The sensor housing allows for ±10° adjustment via the mounting flange slots.

SRH280P

ENVIRONMENTAL

Protection class		IP68 (to 2m depth for 1 hour) or IP50
Life		20 million operations (10×10^6 cycles) of ±75º Sensing element life is essentially infinite (contactless); the SRH280P life figure refers to the operating shaft seal. Mechanical load (axial and radial) on the shaft should also be considered.
Dither life		Contactless - no degradation due to shaft dither
Operational temperature†	°C	-40 to +140 (5V supply) -40 to +137 (9V supply) Derate upper temperature limit by 0.57°C for every 1V increase in supply: e.g. -40 to +125 @30V
Storage temperature	°C	-55 to +140
Vibration		BS EN 60068-2-64:1995 Sec 8.4 (14gn rms) 20 to 2000Hz Random
Shock		3m drop onto concrete
EMC Immunity level		BS EN 61000-4-3:1999, to 100V/m, 80MHz to 1GHz and 1.4GHz to 2.7GHz (2004/108/EC)

† See Maximum Operating Temperature – Derating graph on page 30
If the maximum operating temperature is exceeded, the voltage regulator will shut down to protect the device from overheating

OPTIONS

Measurement range (angle)		Select from 20° to 360° in 1° increments (factory programmed)
Output		Analog voltage (An) or PWM (Pn)
Output direction		Clockwise or Anticlockwise shaft rotation with increasing output
Shaft style		D section, sprung shaft (S) or 2.4mm blade shaft (H)
Shaft sealing		IP50 or IP68
Cable length	m	0.2, 0.5 or 2.0
Custom housing		Synchro mount style with ball race bearings - ask our technical sales team for details
OEM options		Output can be programmed to provide: non linear law; switch output; clamp voltages; faster input/output delay; extended analog range; and output mapping for potentiometer replacements

AVAILABILITY

All standard configurations can be supplied rapidly from the factory - check with your local supplier for more details

ORDERING CODES

SRH280P/...../...../...../...../...../.....

Measurement range	= angle in °
Output	A1 = Analog 0.5-4.5Vdc A4 = Analog 0.1-4.9Vdc P1 = PWM, 244 Hz P2 = PWM, 500 Hz P3 = PWM, 1000 Hz
Direction	1 = Clockwise 2 = Anticlockwise
Shaft style	D = D shaft S = Sprung shaft H = 2.4mm blade shaft
Shaft sealing	50 = IP50 68 = IP68
Cable length	P2 = 0.2m P5 = 0.5m 02 = 2.0m

DIMENSIONS

Note: drawings not to scale

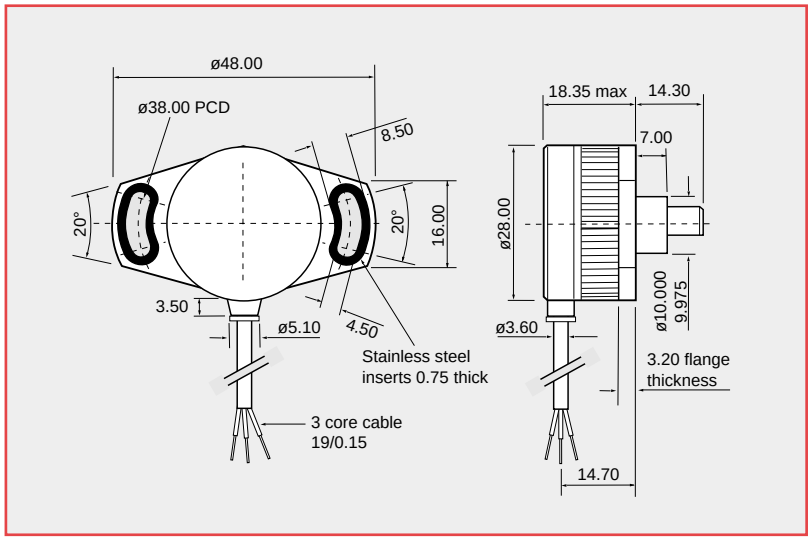

SHAFT OPTIONS

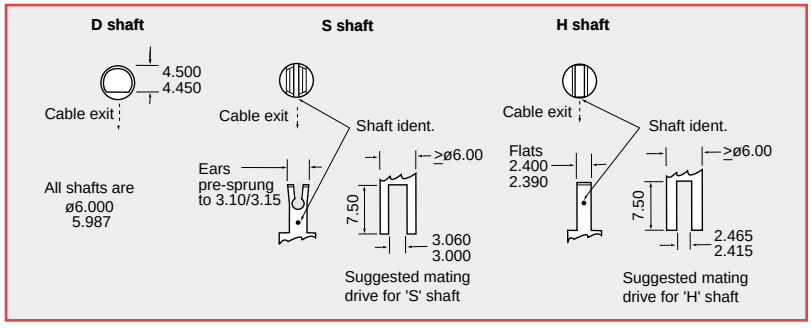

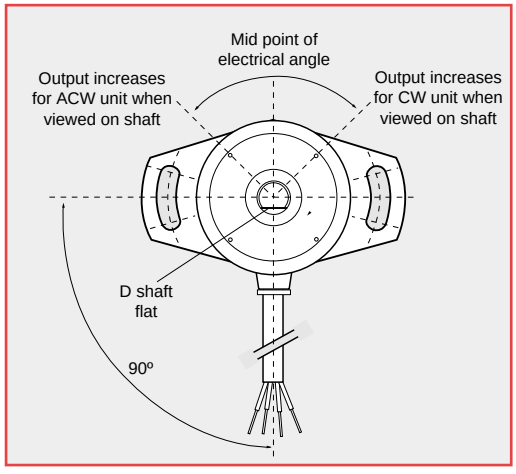

ELECTRICAL CONNECTIONS

200, 500 or 2000mm of 3-core cable: PUR sheathed, with PTFE insulated 19/0.15 cores

Cable colour	Description
Red	+V Supply
Yellow	Output
Black	0V Supply (GND)

Output increases with CW or ACW rotation viewed on shaft - depending on selected order code

When connecting the sensor, care should be taken with the correct connections. The sensor is provided with reverse polarity protection and short circuit protection between output (Yellow) to GND (Black), **but if the output (Yellow) is connected to the supply it will result in device failure.**

SRH280DP DUAL OUTPUT
contactless rotary sensor

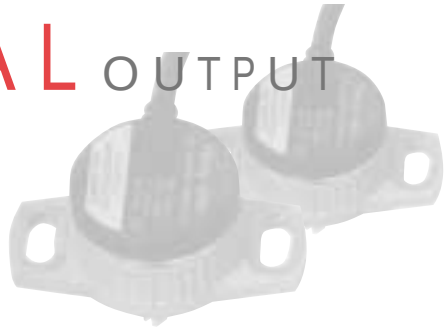

PERFORMANCE

ELECTRICAL

Measurement range	**°**	20 to 360 in 1° increments
Supply voltage	**Vdc**	9 to 30 (unregulated) and 5 ±0.5 (regulated)
Over voltage protection	**Vdc**	Up to 40 (-40 to +60°C)
Maximum supply current	**mA**	<25
Reverse polarity protection		Yes
Short circuit protection		
Output to GND		Yes
Output to supply		In 5V regulated mode only
Power-on settlement time	**S**	<1
Resolution	**%**	0.025 of measurement range (12 bit)
Non-linearity*	**%**	<±0.4
Temperature coefficient	**ppm/°C**	<±30 in 5V supply mode; <±90 in 9-30V supply mode

* Non-linearity is measured using the least-squares method on a computerised calibration system

Analog Output (order code A1, A4) – see graph on page 31

Voltage output range		
9-30V supply	**Vdc**	Absolute voltage, 0.5 to 4.5 (A1) or 0.1 to 4.9 (A4) over measurement range (±3%)
5V supply	**Vdc**	Ratiometric output voltage - 10 to 90% (A1) or 2 to 98% (A4) of Vs over measurement range (±1%)
Monotonic range	**Vdc**	0.25 (5%) and 4.75 (95%) nominal (A1)
	Vdc	0.05 (1%) and 4.95 (99%) nominal (A4)
Load resistance	**Ω**	10k minimum (resistive to GND)
Output noise	**mVrms**	<1
Input/output delay	**mS**	<2

PWM Output (order code Pn) – see output characteristics on page 31

PWM frequency	**Hz**	244 (P1); 500 (P2); or 1000 (P3) ±20% over temperature range
PWM levels 9-30V supply	**Vdc**	0 and 5 nominal (±3%)
5V supply	**Vdc**	0 and Vs (±1%)
Duty cycle	**%**	10 to 90 over measurement range
Monotonic range	**%**	5 and 95 nominal
Load resistance	**Ω**	10k minimum (resistive to GND)
Rise/fall time	**µS**	<15

MECHANICAL

Mechanical angle	**°**	360, continuous
Operating torque - maximum		
sealed shaft IP68	**g-cm**	120
unsealed shaft IP50	**g-cm**	100
Shaft velocity maximum	**°/sec**	3600
Weight	**g**	<35
Mounting		Use 2 x M4 socket head cap screws and M4 washer - maximum tightening torque 2Nm
Phasing		When shaft flat (or shaft ident mark) is facing toward the cable exit, output is at mid travel. The sensor housing allows for ±10° adjustment via the mounting flange slots.

ENVIRONMENTAL

Protection class		IP68 (to 2m depth for 1 hour) or IP50
Life		20 million operations (10 x 10^6 cycles) of ±75°
		Sensing element life is essentially infinite (contactless); the SRH280DP life figure refers to the operating shaft seal. Mechanical load (axial and radial) on the shaft should also be considered.
Dither life		Contactless - no degradation due to shaft dither
Operational temperature†	°C	-40 to +140 (5V supply)
		-40 to +135.7 (9V supply) Derate upper temperature limit by 1.7°C for every 1V increase in supply: e.g. -40 to +100 @30V
Storage temperature	°C	-55 to +140
Vibration		BS EN 60068-2-64:1995 Sec 8.4 (31.4gn rms) 20 to 2000Hz Random
Shock		3m drop onto concrete
EMC Immunity level		BS EN 61000-4-3:1999, to 100V/m, 80MHz to 1GHz and 1.4GHz to 2.7GHz (2004/108/EC)

† See Maximum Operating Temperature – derating graph on page 30.
If the maximum operating temperature is exceeded, the voltage regulator will shut down to protect the device from overheating

OPTIONS

Measurement range (angle)		Select from 20° to 360° in 1° increments (factory programmed) for each output channel
Output		Analog voltage (An) or PWM (Pn)
Output direction		Both clockwise, both anticlockwise or one CW, one ACW
Shaft style		D section, sprung shaft (S) or 2.4mm blade shaft (H)
Shaft sealing		IP50 or IP68
Cable length	m	0.2 or 0.5
Custom housing		Synchro mount style with ball race bearings - ask our technical sales team for details
OEM options		Outputs can be programmed to provide: non linear laws; switch outputs; clamp voltages; different output phasing CH1/CH2; faster input/output delay; extended analog range; and output mapping for potentiometer replacements

AVAILABILITY

All standard configurations can be supplied rapidly from the factory - check with your local supplier for more details

ORDERING CODES

SRH280DP/...../...../...../...../...../...../.....

Measurement range	CH1 = angle in °
Measurement range	CH2 = angle in °
Output	A1 = Analog 0.5-4.5Vdc A4 = Analog 0.1-4.9Vdc P1 = PWM, 244 Hz P2 = PWM, 500 Hz P3 = PWM, 1000 Hz
Direction	3 = Both clockwise 4 = Both anticlockwise 5 = CH1 CW; CH2 ACW
Shaft style	D = D shaft S = Sprung shaft H = 2.4mm blade shaft
Shaft sealing	50 = IP50 68 = IP68
Cable length	P2 = 0.2m P5 = 0.5m

SRH280DP

DIMENSIONS

Note: drawings not to scale

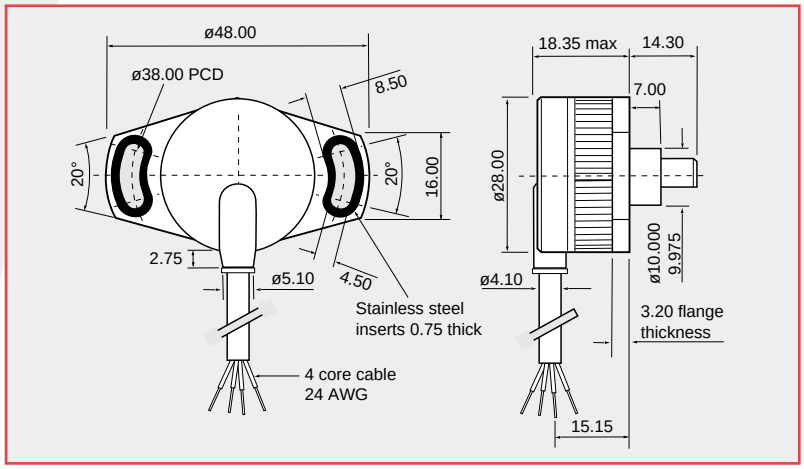

SHAFT OPTIONS

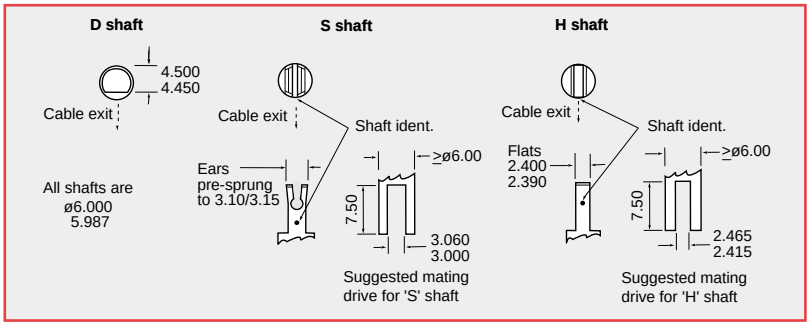

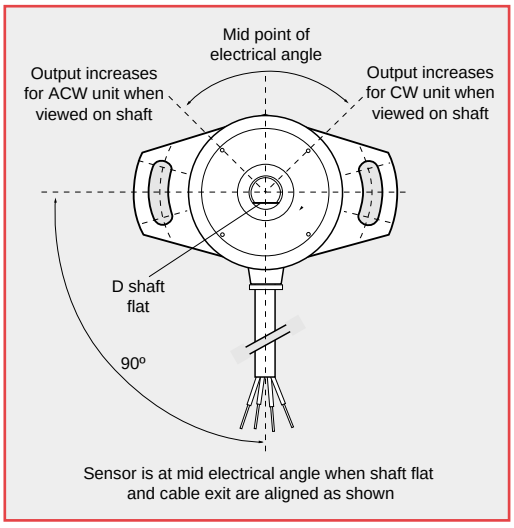

ELECTRICAL CONNECTIONS

200 or 500mm of 4-core cable: FDR-25 sheathed, with 55A spec (24AWG) cores

Cable colour	Description
Red	+V Supply
Yellow	Output 1
White	Output 2
Black	0V Supply (GND)

Output increases with CW or ACW rotation viewed on shaft - depending on selected order code.

When connecting the sensor, care should be taken with the correct connections. The sensor is provided with reverse polarity protection and short circuit protection between outputs (Yellow & White) to GND (Black), **but if the outputs (Yellow & White) are connected to the supply this will result in device failure.**

TPS280DP DUAL OUTPUT
contactless throttle position/rotary sensor

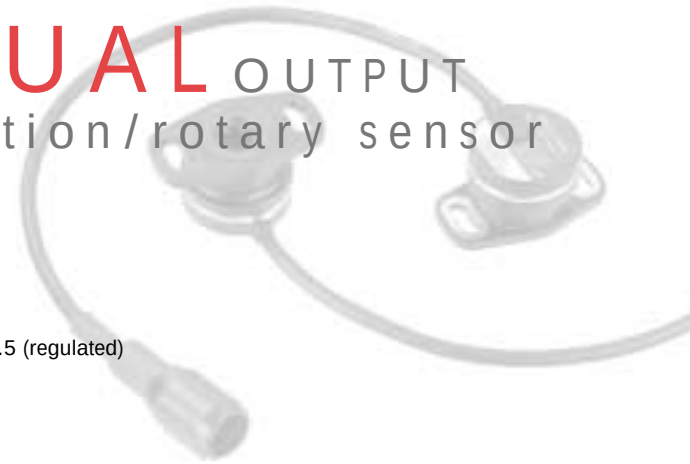

PERFORMANCE

ELECTRICAL

Measurement range	**°**	20 to 360 in 1° increments
Supply voltage	**Vdc**	9 to 30 (unregulated) and 5 ±0.5 (regulated)
Over voltage protection	**Vdc**	Up to 40 (-40 to +60°C)
Maximum supply current	**mA**	<25
Reverse polarity protection		Yes
Short circuit protection		
Output to GND		Yes
Output to supply		In 5V regulated mode only
Power-on settlement time	**S**	<1
Resolution	**%**	0.025 of measurement range (12 bit)
Non-linearity*	**%**	<±0.4
Temperature coefficient	**ppm/°C**	<±30 in 5V supply mode; <±90 in 9-30V supply mode

*Non-linearity is measured using the Least-Squares method on a computerised calibration system

Analog Output (order code A1, A4) – see graph on page 31

Voltage output range		
9-30V supply	**Vdc**	Absolute voltage, 0.5 to 4.5 (A1) or 0.1 to 4.9 (A4) over measurement range (±3%)
5V supply	**Vdc**	Ratiometric output voltage - 10 to 90% (A1) or 2 to 98% (A4) of Vs over measurement range (±1%)
Monotonic range	**Vdc**	0.25 (5%) and 4.75 (95%) nominal (A1)
	Vdc	0.05 (1%) and 4.95 (99%) nominal (A4)
Load resistance	**Ω**	10k minimum (resistive to GND)
Output noise	**mVrms**	<1
Input/output delay	**mS**	<2

PWM Output (order code Pn) – see output characteristics on page 31

PWM frequency	**Hz**	244 (P1); 500 (P2); or 1000 (P3) ±20% over temperature range
PWM levels 9-30V supply	**Vdc**	0 and 5 nominal (±3%)
5V supply	**Vdc**	0 and Vs (±1%)
Duty cycle	**%**	10 to 90 over measurement range
Monotonic range	**%**	5 and 95 nominal
Load resistance	**Ω**	10k minimum (resistive to GND)
Rise/fall time	**µS**	<15

MECHANICAL

Mechanical angle	**°**	360, continuous
Operating torque	**g-cm**	10
Maximum rotational speed	**°/sec**	3600
Weight	**g**	<30
Mounting		Use 2 x M4 socket head cap screws and M4 washer - maximum tightening torque 2Nm
Phasing		When shaft drive detail is aligned as shown in Electrical Angle Diagram (page 21), output is at mid travel. The sensor housing allows for ±10° adjustment via the mounting flange slots.

TPS280DP

ENVIRONMENTAL

Protection class		IP68 (to 2m depth for 1 hour) and IP69K
Life		60 million operations (30 x 10^6 cycles) of ±75°; Sensing element life is essentially infinite (contactless)
Dither life		Contactless - no degradation due to shaft dither
Operational temperature†	°C	-40 to +140 (5V supply) and +170°C for 72 hours
		-40 to +135.7 (9V supply option) Derate upper temperature limit by 1.7°C for every 1V increase in supply: e.g. -40 to +100 @30V
Storage temperature	°C	-55 to +140
Vibration		BS EN 60068-2-64:1995 Sec 8.4 (31.4gn rms) 20 to 2000Hz Random
Shock		3m drop onto concrete and 2500g
EMC Immunity level		BS EN 61000-4-3:1999, to 100V/m, 80MHz to 1GHz and 1.4GHz to 2.7GHz (2004/108/EC)

† See Maximum Operating Temperature – Derating graph on page 30.
If the maximum operating temperature is exceeded, the voltage regulator will shut down to protect the device from overheating

OPTIONS

Measurement range (angle)		Select from 20° to 360° in 1° increments (factory programmed) for each output channel
Output		Analog voltage (An) or PWM (Pn)
Output direction		Both clockwise, both anticlockwise or one CW, one ACW
Cable length	m	0.2 or 0.5
Connector		Not fitted (C0) or Mini Sure Seal MSS4R fitted (C1)
OEM options		Outputs can be programmed to provide: non linear laws; switch outputs; clamp voltages; different output phasing CH1/CH2; faster input/output delay; extended analog range; and output mapping for potentiometer replacements.

AVAILABILITY

All standard configurations can be supplied rapidly from the factory – check with your local supplier for more details

ORDERING CODES

TPS280DP/ ..... / ..... / ..... / ..... / ..... / .....

Measurement range	CH1 = angle in °
Measurement range	CH2 = angle in °
Output	A1 = Analog 0.5-4.5Vdc A4 = Analog 0.1-4.9Vdc P1 = PWM, 244 Hz P2 = PWM, 500 Hz P3 = PWM, 1000 Hz
Direction	3 = Both clockwise 4 = Both anticlockwise 5 = CH1 CW; CH2 ACW
Cable length	P2 = 0.2m P5 = 0.5m
Connector	C0 = No connector C1 = Mini Sure Seal MSS4R

Accessories (order all items separately)

Mating connector –	X61-227-002 Mini Sure Seal MSS4P X61-227-201 PIN contact (2off required) X61-227-202 SOCKET contact (2off required)

DIMENSIONS

Note: drawings not to scale

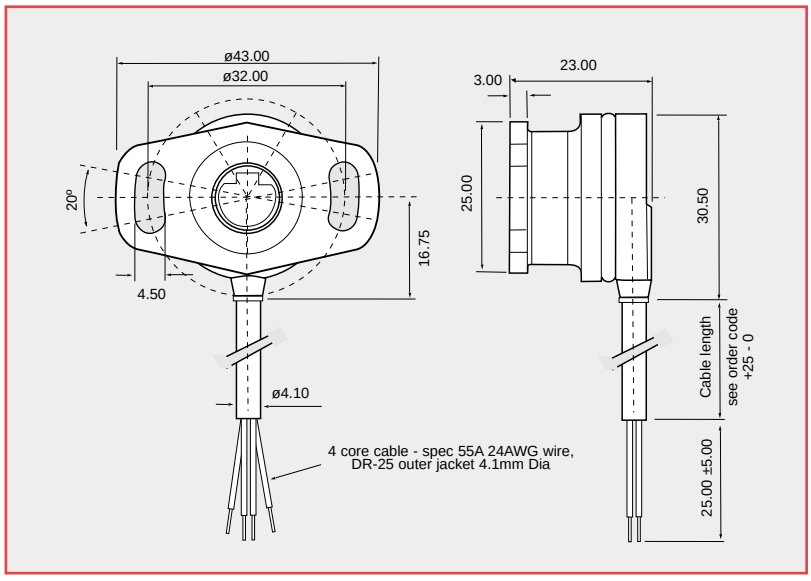

ELECTRICAL ANGLE

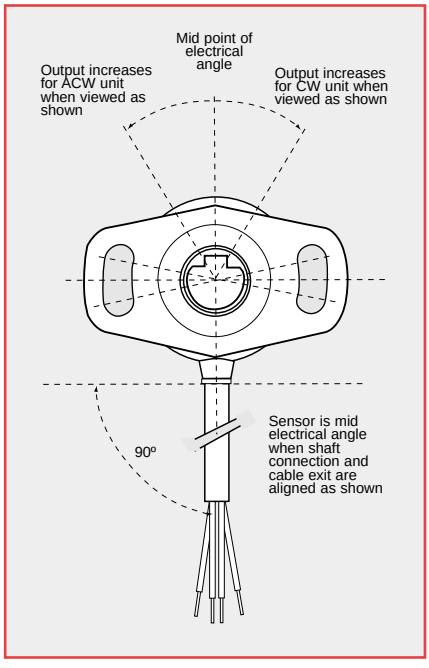

RECOMMENDED MATING DRIVE

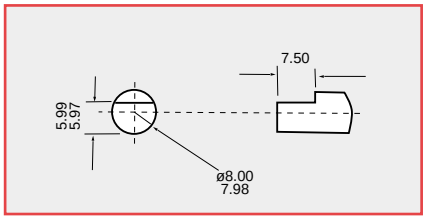

ELECTRICAL CONNECTIONS

Option C0 - 200 or 500mm of 4-core cable: FDR-25 sheathed, with 55A spec (24AWG) cores

Option C1 - Mini sure seal MSS4R fitted to cable

Cable colour	Description
Red	+V Supply
Black	0V Supply GND
Yellow	CH1 Output
White	CH2 Output

Output increases with CW or ACW rotation viewed on shaft drive - depending on selected order code

C1 Connector option

Pin 1 = V+ Supply
Pin 2 = 0V Supply GND
Pin 3 = CH1 Output
Pin 4 = CH2 Output

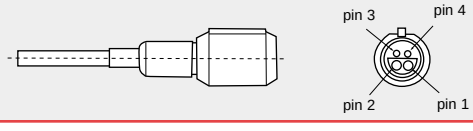

When connecting the sensor, care should be taken with the correct connections. The sensor is provided with reverse polarity protection and short circuit protection between outputs (Yellow & White) to GND (Black), **but if the outputs (Yellow & White) are connected to the supply this will result in device failure.**

TEMPERATURE AND OUTPUT GRAPHS

MAXIMUM OPERATING TEMPERATURE - DERATING GRAPHS

SRH280P

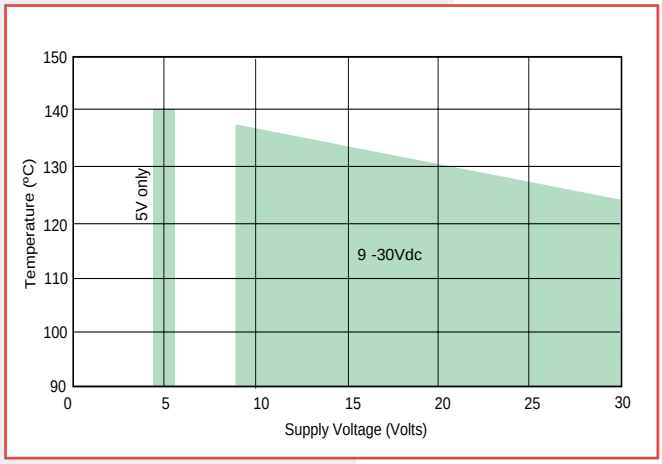

SRH280DP, NRH280DP, TPS280DP, SRH220DR SRH501P/502P (not A2 & A3 options)

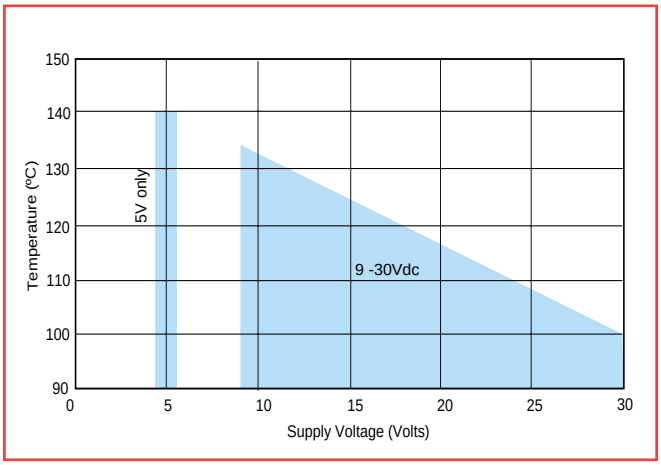

SRH220DR, SRH501P/502P - OUTPUT A2

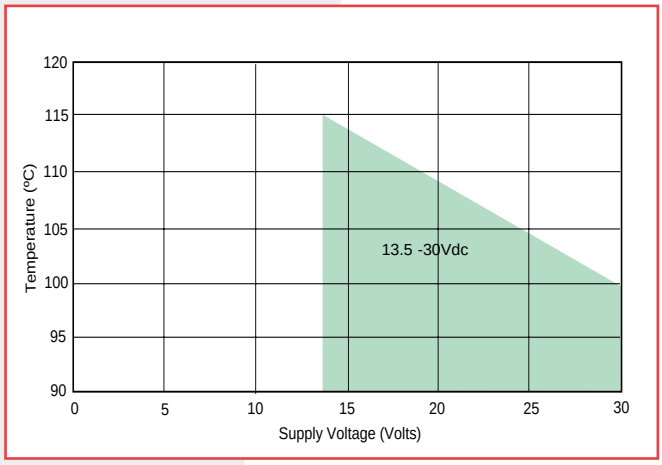

SRH501P/502P - OUTPUT A3

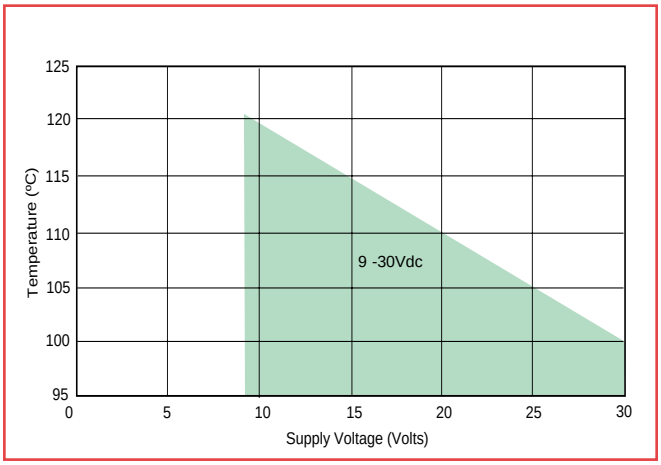

A3 Typical temperature slope characteristic (can be used for compensation)

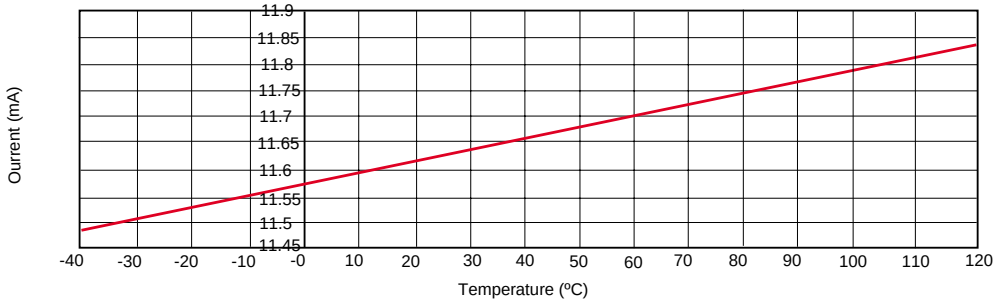

SENSOR OUTPUT GRAPH- examples for three different angles

SRH280P, SRH280DP, NRH280DP, NRH285DR, TPS280DP, SRH220DR - OUTPUT A1
SRH501P/502P - OUTPUT A1
SRH880P - OUTPUT A

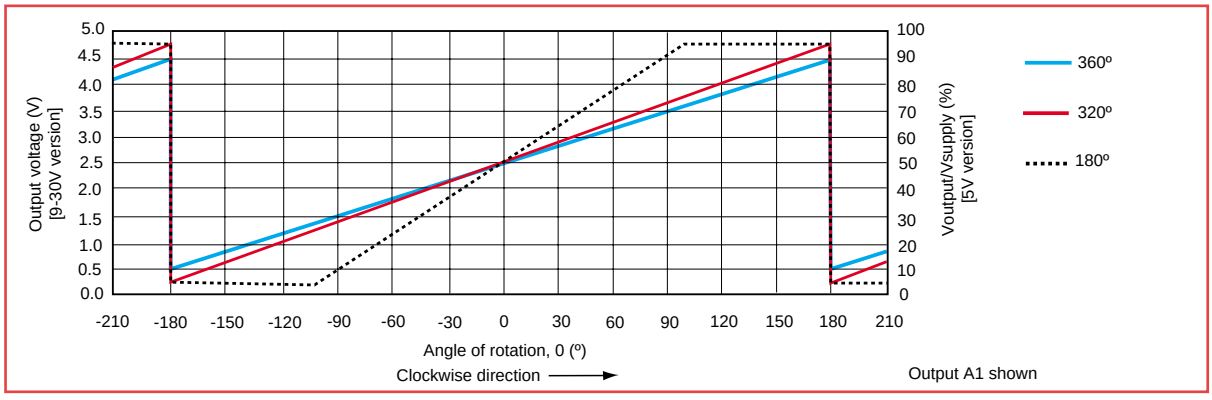

SRH220DR,SRH501P/502P - OUTPUT A2 (0-10Vdc)

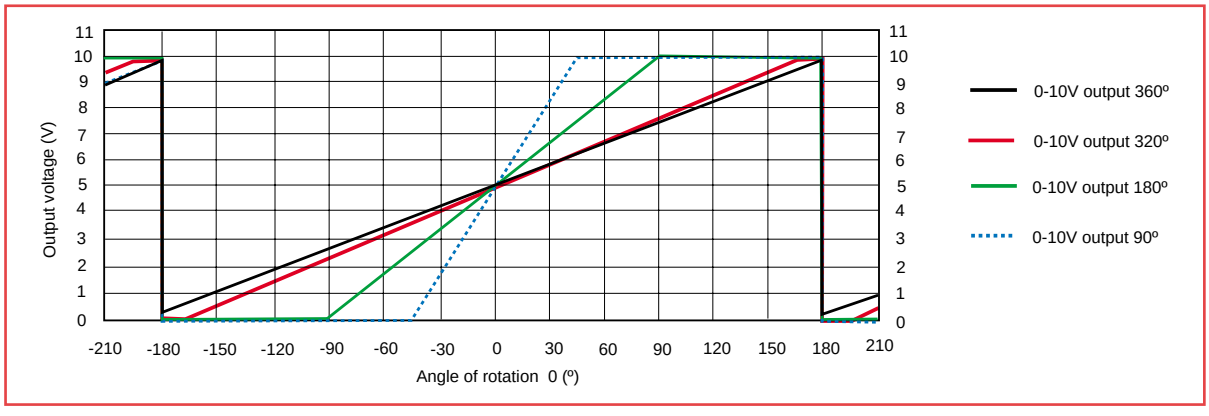

SRH501P/502P - OUTPUT A3 (4-20mA)

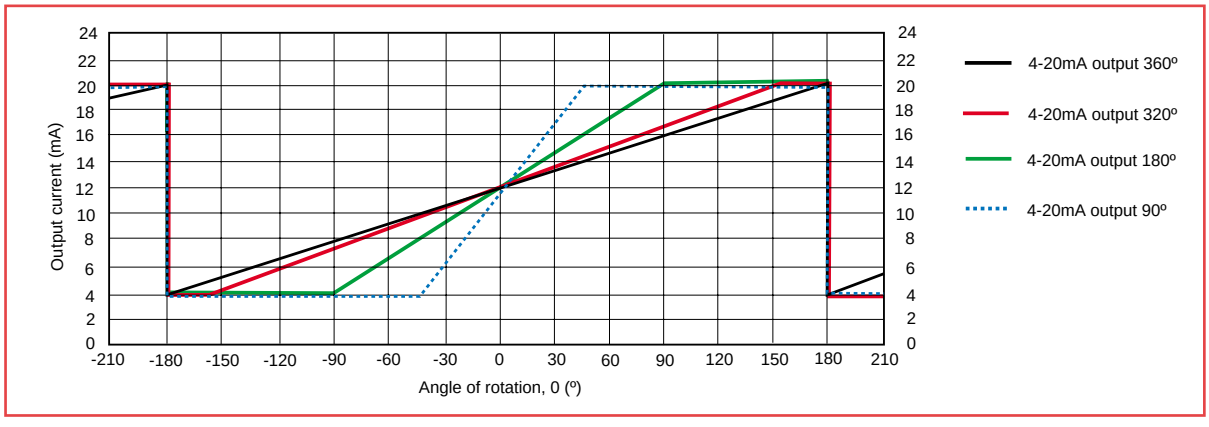

PWM OUTPUT CHARACTERISTICS

SRH280P, SRH280DP, NRH280DP, NRH285DR, TPS280DP, SRH220DR - OUTPUT P1, P2, P3
SRH501P/502P - OUTPUT P1, P2, P3
SRH880P- OUTPUT P

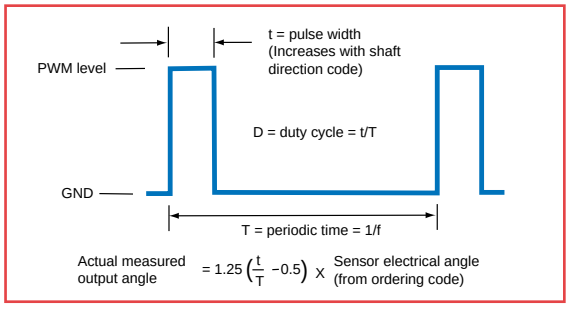

PWM levels = zero volt and 5V (±3%) for 9-30V supply
= zero volt and V_S (±1%) for 5V supply

Penny+Giles
A Curtiss-Wright Company

ROTARY POTENTIOMETERS

Penny+Giles high durability potentiometer track technology provides virtually infinite resolution, low electrical noise and high stability under extremes of temperature, humidity, vibration and shock over a long operating life.
These potentiometers are ideally suited and race proven in providing data acquisition systems with clean, robust signals for throttle angle, steering angle and gear select position indication.

Features

- Corrosion resistant stainless steel shaft
- Duplex shaft bearing support
- Choice of shaft attachments
- Hybrid and conductive plastic tracks
- Electrical angles from 10° to 350°
- Rugged mechanical design
- Sealing to IP68 (SRS280)
- Rapid despatch of any option (SRS280)
- CE Approved (SRS280)

Benefits

- Accurate drive location in hostile environments
- Optimum performance under vibration
- Interchangeable with existing installations
- Stable output signal over a long life
- Maximum sensitivity in all applications
- Operation in high shock and vibration environments
- Operation in hostile environments
- Eliminates customer inventory
- Confidence in EMC performance

SRS280 SEALED ROTARY SENSOR

PERFORMANCE

ELECTRICAL

Electrical angle ±2	°	10 to 350 in 10° increments
Resistance ±20%	Ω	14.3 per degree
Hysteresis (repeatability)	°	< 0.03
Accuracy		< 1 degree (e.g. ±0.3% over 330°, ±1% over 100°)
Power dissipation at 20˚C	W	0.003 W per angular degree
Applied voltage maximum	Vdc	0.2 per angular degree
Resolution		Virtually infinite
Output smoothness		To MIL-R-39023 grade C 0.1%
Insulation resistance		Greater than 100MΩ at 500Vdc
Operating mode		Voltage divider only - see Circuit Recommendation below
Wiper circuit impedance		Minimum of 100 x track resistance or 0.5MΩ (whichever is greater)

MECHANICAL

Mechanical angle	°	360, continuous
Mounting		Use 2 x M4 socket head cap screws and M4 washer - maximum tightening torque 2Nm
Operating torque maximum		
unsealed shaft IP50	gm cm	100
sealed shaft IP68	gm cm	120
Shaft velocity maximum	°/sec	3000
Weight	g	32 (cable option A), 64 (cable option B)
Phasing		When shaft flat (or shaft ident mark) is facing the cable exit, wiper is at mid travel The sensor housing allows for ±10º adjustment via the mounting flange slots

ENVIRONMENTAL

Life		
unsealed shaft IP50		Exceeds 20 million operations (10 x10^6 cycles) of ±75º
sealed shaft IP68		20 million operations (10 x10^6 cycles) of ±75º
Dither life		200 million operations (100 x 10^6 cycles) of ±3°, 60Hz
Operational temperature	ºC	-40 to +130 (continuous)
Vibration		RTCA-DO160D, 10Hz to 2000Hz (random), 12.61g rms - all axes
Shock		Survival to 2500g - all axes

CIRCUIT RECOMMENDATION

Hybrid track potentiometers feature a high wiper contact resistance, therefore operational checks should be carried out only in the voltage divider mode. Hybrid track potentiometers should be used only as voltage dividers, with a minimum wiper circuit impedance of 100 x track resistance or 0.5MΩ (whichever is greater). Operation with wiper circuits of lower impedance will degrade the output smoothness and affect the linearity.

OPTIONS

Electrical angle	Can be supplied from 10° to 350° in 10° increments
Shaft style	D section, sprung shaft (S) or 2.4mm blade shaft (H)
Shaft sealing	IP50 or IP68
Cable length	0.5m or 2m

AVAILABILITY

All standard configurations can be supplied rapidly from the factory - check with your local supplier for more details

ORDERING CODES

SRS280/...../...../...../.....

Electrical angle
Shaft style D = D shaft
S = Sprung shaft
H = 2.4mm blade shaft

Cable A = 0.5m, B = 2m
Shaft sealing 50 = IP50
68 = IP68

DIMENSIONS

Note: drawings not to scale

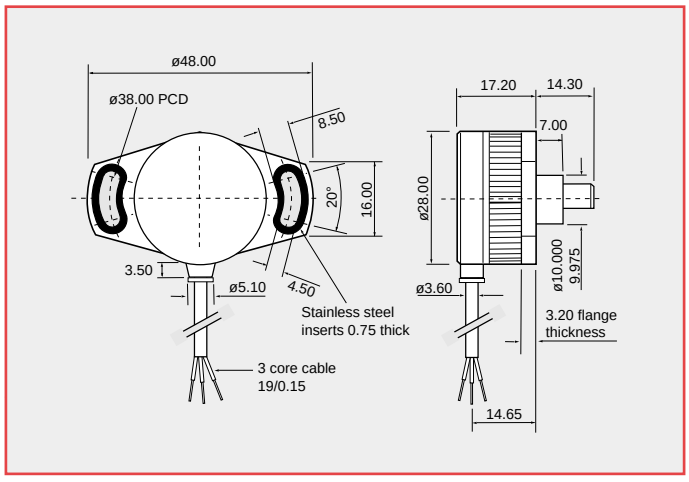

SHAFT OPTIONS

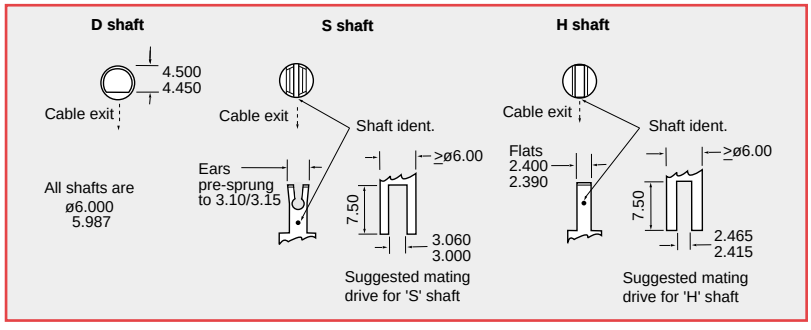

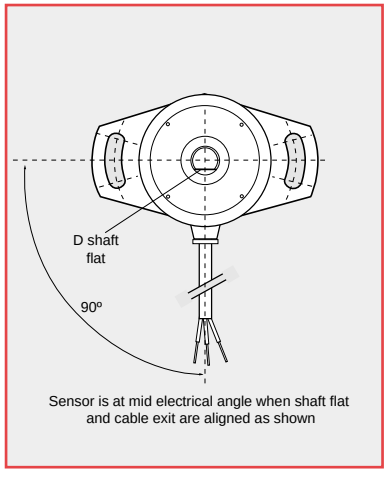

ELECTRICAL CONNECTIONS

3 core cable: PUR sheathed, with PTFE insulated 19/0.15 cores.

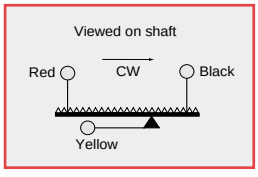

RCP11/2S

This specially developed RCP11 has dual electrical output and facilitates low electrical noise and virtually infinite resolution over exceptionally long operating life under extreme operating conditions. This potentiometer is ideally suited and race proven in providing data acquisition systems with clean, robust signals for gear select position indication.

PERFORMANCE

Electrical angle ±1	**°**	350
Resistance ±10%	**kΩ**	1
Independent linearity	**±%**	0.25
Power dissipation at 20°C	**W**	1.5
Dielectric strength	**Vrms**	750
Applied voltage - maximum	**Vdc**	38
Resolution		Virtually infinite
Output smoothness		To MIL-R-39023 grade C 0.1%
Insulation resistance		Greater than 100MΩ at 500Vdc
Phasing between tracks ±1°		at 50% applied voltage
Operating mode		Voltage divider only - see Circuit Recommendation below
Maximum wiper current	**mA**	10
Mechanical angle	**°**	360 continuous
Starting torque - maximum	**gm cm**	16
Shaft run out - TIR	**mm**	0.025
Lateral run out - TIR	**mm**	0.051
Pilot run out - TIR	**mm**	0.025
Shaft end play - maximum	**mm**	0.076
Weight	**g**	25
Life		Greater than 50 million rotations
Operational temperature	**°C**	-65 to +130

CIRCUIT RECOMMENDATION

The RCP11 range of potentiometers feature a high wiper contact resistance, therefore operational checks should be carried out only in the voltage divider mode. These potentiometers should be used only as voltage dividers, with a minimum wiper circuit impedance of 100 x track resistance or 0.5MΩ (whichever is greater). Operation with wiper circuits of lower impedance will degrade the output smoothness and affect the linearity.

OPTIONS

Electrical angle	Non standard angles can be specified
Resistance	Non standard resistance values can be specified
Single gang output	Single gang output only can be specified
Mounting	Custom mounting configurations can be specified

AVAILABILITY

Please consult our sales office for details

ORDERING CODE

RCP11/2S D150397

DIMENSIONS

Note: drawings not to scale

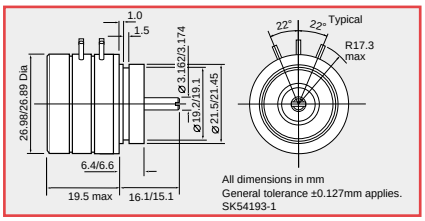

ELECTRICAL CONNECTIONS

SRS280

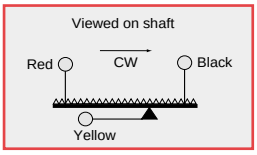

3 core cable: PUR sheathed, with PTFE insulated 19/0.15 cores

RCP11/2S

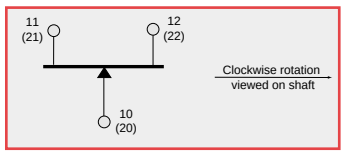

6x terminals, gold plated

Penny+Giles

A Curtiss-Wright Company

RVDT DISPLACEMENT TRANSDUCERS

The Penny+Giles rugged, high integrity RVDT displacement transducer is designed for operation in harsh automotive and motorsport environments. The design elements employed have evolved from the technology and experience gained over 40 successful years in the aerospace/military sensor market, where performance and reliability under extreme operating conditions are paramount

High accuracy system performance

This ac operated RVDT displacement transducer has been designed primarily for use in the 'difference over sum' (ratiometric) configuration to provide high system accuracy performance where the output is virtually unaffected by temperature and supply changes. Using high integrity coil and rotor designs, combined with a titanium housing, this RVDT can be supplied with a choice of shaft and mounting flanges to suit high performance, high temperature engine control applications.

Features	*Benefits*
• No contact between the sensing elements	• Virtually infinite life and fast dynamic response
• Precision low torque bearings	• Long trouble free life
• Infinite resolution	• All displacement will be sensed
• Temperature range -40° to +180°C	• Maximum reliability in hostile environments
• High integrity coils, screen and connection assemblies	• Maximum reliability in hostile environments
• Corrosion resistant stainless steel drive shaft	• Accurate drive location in hostile environments
• Rugged mechanical design with titanium housing	• Maximum reliability in high shock and vibration environments

RVDT AC OPERATED

PERFORMANCE

Electrical angle	**°**	±60 (120 total)
Mechanical angle	**°**	360 continuous
Input voltage	**Vrms**	3
Input frequency	**kHz**	2
Insulation resistance		Greater than 50MΩ at 250Vdc
Resolution		Virtually infinite
Operational temperature	**°C**	-40 to +180
Operating mode		Ratiometric
Electrical output R proportional to position		$R = \frac{Va - Vb}{Va + Vb}$
Electrical output R at ±60°		±0.504
Non-linearity (0 to ±50°)	**±%**	1
(±50° to ±60°)	**±%**	2
Input impedance		Greater than 150Ω at 2kHz
Load resistance (per coil)		Greater than 100kΩ
Phasing		With black, white and yellow leads common, the output on blue and green leads shall be in anti-phase with the red input for all shaft positions
Temperature error	**ppm/°C**	Please consult the factory for details
Weight (maximum)	**g**	85

OPTIONS

Mounting — Custom mounting configurations can be specified

ORDERING CODE

RVDT D45600

OUTPUT SCHEMATICS

Output Vs angle

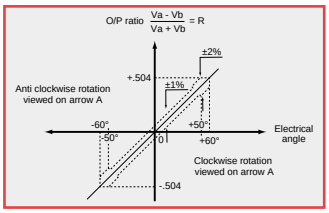

Individual output voltage schematic

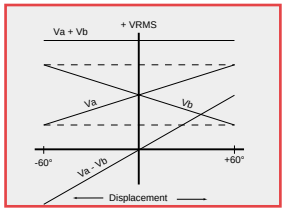

DIMENSIONS

Note: drawings not to scale

Suggested driving slot for shaft

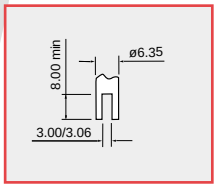

RVDT D45600

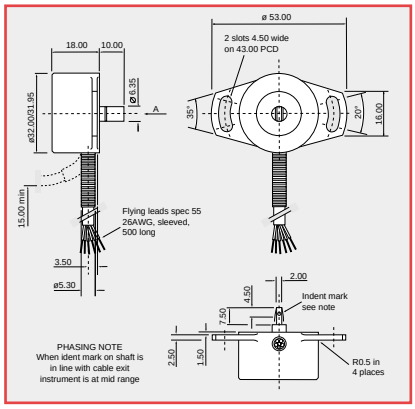

Alternative mounting styles

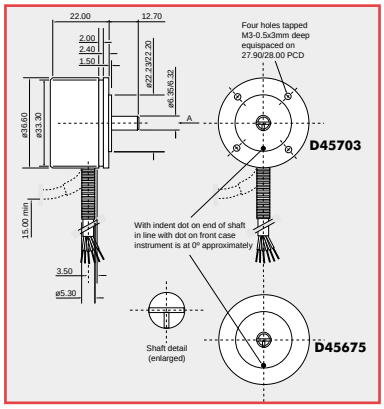

ELECTRICAL CONNECTIONS

6 flying leads 26 AWG, sleeved 500mm long

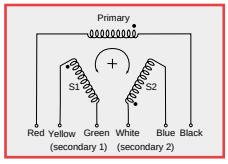

Penny+Giles

A Curtiss-Wright Company

Penny+Giles - one of the world's major suppliers of measurement and control sensors

throttle pedal position

gear select position indication

hydraulic reservoir level

front and rear suspension movement

throttle actuator position

steering angle position

gearbox actuator position

clutch pedal position

clutch actuator position

brake balance measurement

brake pad/disc wear indication

Penny+Giles

A Curtiss-Wright Company

Doc Ref: SLS & MLS 01/12

www.pennyandgiles.com

Penny & Giles
Position sensors, joysticks and solenoids for commercial and industrial applications.

15 Airfield Road
Christchurch
Dorset BH23 3TG
United Kingdom
+44 (0) 1202 409409
+44 (0) 1202 409475 Fax
sales@pennyandgiles.com

36 Nine Mile Point Industrial Estate
Cwmfelinfach
Gwent NP11 7HZ
United Kingdom
+44 (0) 1495 202000
+44 (0) 1495 202006 Fax
sales@pennyandgiles.com

665 North Baldwin Park Boulevard
City of Industry, CA 91746
USA
+1 626 480 2150
+1 626 369 6318 Fax
us.sales@pennyandgiles.com

Straussenlettenstr. 7b
85053 Ingolstadt,
Germany
+49 (0) 841 885567-0
+49 (0) 841 885567-67 Fax
info@penny-giles.de

3-1-A, Xiandai Square,
No 333 Xingpu Rd,
Suzhou Industrial Park, 215126
China
+86 512 6287 3380
+86 512 6287 3390 Fax
sales@pennyandgiles.com.cn

Innovation In Motion

CURTISS WRIGHT Controls
Integrated Sensing

www.cwcontrols.com