KEYENCE

NEW **Multi-Purpose CCD Laser Micrometer**

IG Series

# A Wide Variety of Application Modes for Easy, High-Accuracy Measurements

LASER EDGE SENSOR

*Intelligent Sensor*

*I-SERIES*


Low-cost High Performance

# Thrubeam Digital Laser Sensor with the Highest Level of Stability


## REPEATABILITY OF 5 µm 0.20 Mil
## LINEARITY OF ± 0.1% (IG-028)

The sensor provides a high level of stability with its multi-wavelength laser and parallel computing chip.

### WIDE VARIETY OF APPLICATION MODES

- Edge control mode
- Outer diameter measurement mode
- Inner diameter/Gap measurement mode
- Edge detection of transparent targets


**POSITION MONITOR**

Measurements are performed with up to 28,000 optical axes (IG-028), each of which monitors the amount of light received.

## Large Distance between the Transmitter and Receiver

IG-028: Max. 1500 mm 59.06" IG-010: Max. 1000 mm 39.37"

## L-CCD* Light-Receiving Element

The sensor recognizes the position of a target and is less sensitive to its environment, making it possible to achieve stable target measurement.

* L-CCD : Linearized-Charge Coupled Device

## IP67 Protection

The enclosure is resistant to harsh environments and offers long-term durability.

## Display Unit Options

There are two types of display units: panel mount and DIN-rail mount. When a display unit is connected to a communication unit, measurement data can be sent to external devices such as a PLC.


Panel mount type
**IG-1500/1550**

DIN-rail mount type
**IG-1000/1050**

# I-SERIES
Intelligent Sensor

## THREE CONCEPTS

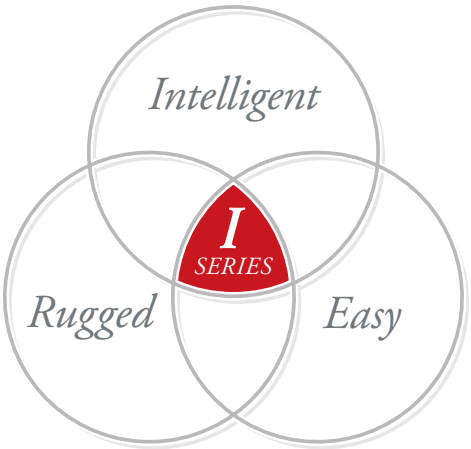


### *Intelligent*

High accuracy was achieved by using the technology and functions developed for high-accuracy measuring instruments.

### *Rugged*

Developed for use in harsh environments, the IG Series was designed with a strong structure.

### *Easy*

Excellent usability makes it possible to quickly and easily perform stable measurements without any difficult adjustments and settings.

The intelligent I-Series consists of a high-accuracy sensor lineup that realizes low-cost high performance with only the most advanced functions for on-site operations.

Low-cost High Performance

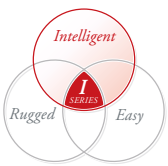


## High stability and measurement accuracy are achieved with the newly developed optical system

## Multi-Wavelength Laser + I-DSP

With conventional lasers, the transmission spot produces a patchy pattern (as shown in the figure to the right). This is a laser-specific interference problem caused by the laser having a single wavelength. The IG Series sensor overcomes this problem by using a multi-wavelength laser. Because shadows are formed on the CCD more clearly, the sensor remains highly stable, even with targets that are conventionally difficult to detect (e.g. transparent objects). With the I-DSP (a parallel computing chip) incorporated in the receiver, the sensor can perform data processing at high speed, reducing noise to a minimum.

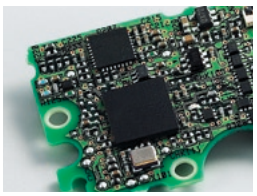

### SPOT IMAGE

**Single-wavelength laser (conventional laser sensor)**

A patchy pattern appears.

**Multi-wavelength laser (IG)**

Due to the multi-wavelength laser used, the beam pattern has a more uniform intensity distribution.

Best in its class

**Repeatability of 5 μm 0.20 Mil**

Best in its class

**Linearity of ±0.1%**

### STABLE DETECTION OF TRANSPARENT & MESH TARGETS

The L-CCD makes it possible to detect a target based on its position. Edge control and positioning of transparent and mesh targets can be performed stably.

Transparent target

Mesh target

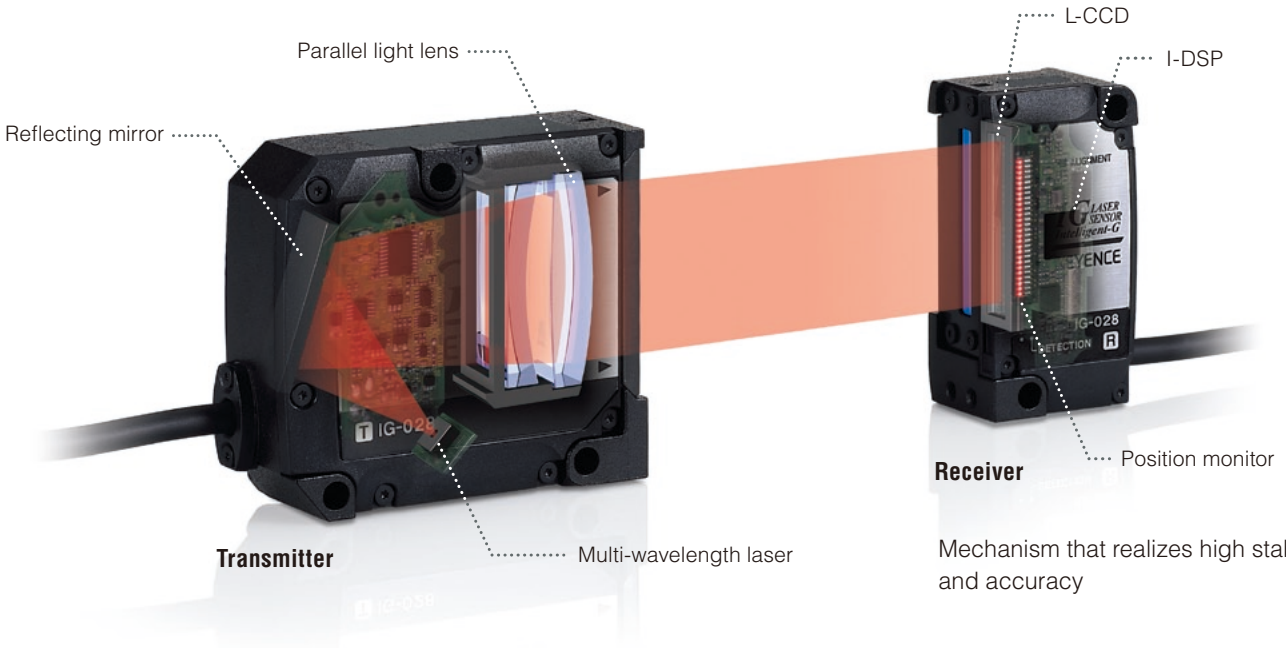


Mechanism that realizes high stability and accuracy


## Extremely easy to use due to the built-in position monitor

# Determining the Part of a Target to be Measured

The position monitor on the IG Series sensors makes it possible to visually check how a target is detected. The user can prevent mounting or setting errors by observing the red lights that indicate the received light position and the green lights that indicate the measurement position.


# Easier Optical Axis Alignment

The position monitor makes it easier to align the optical axis. Easily perform optical axis alignment by adjusting the sensor head so that all of the position monitor lights turn red.

Optical axis alignment in progress

Optical axis alignment complete

# FUNCTION AND STRUCTURE THAT MATCHES THE ON-SITE ENVIRONMENT

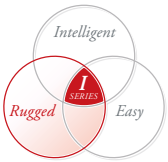


## Easy to maintain thanks to excellent environment resistance

## Key Point: Less Sensitive to Dirt

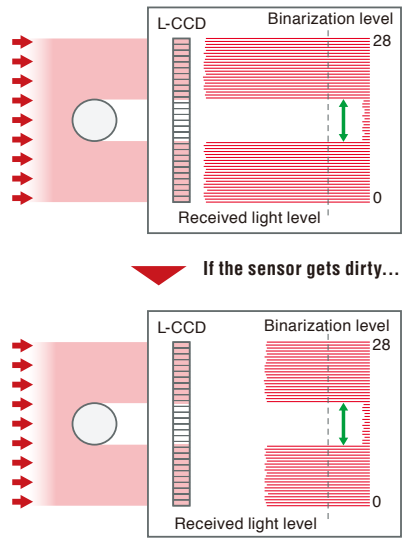


Although dirt reduces the total amount of light received, the measurement position is the same. The shadow of a target is shown.

Because it uses an L-CCD, the IG Series is less sensitive to materials such as dirt than a sensor that uses a photodiode (PD) as the light-receiving element.

## IP67 Protection

The enclosure satisfies the IP67 rating based on the IEC standards and remains watertight even after being held at a depth of one meter for 30 minutes. The enclosure is resistant to adverse environments and offers long-term durability.

## Flexible Free-Cut Cable

The sensor head cable is a robot cable that withstands repeated bending. The cable can be used safely in a position requiring repeated motion.

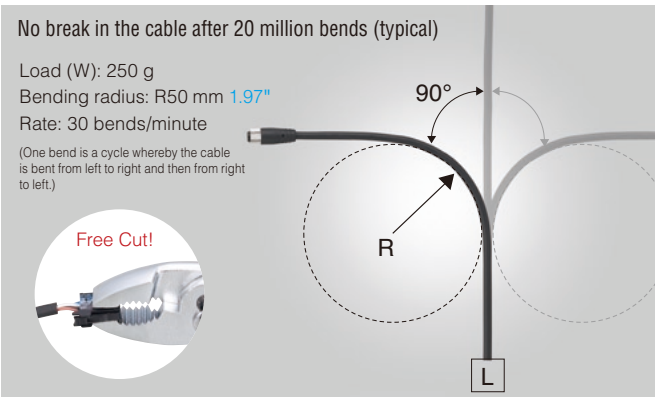


## Edge Check Function

The user can check whether a measurement is performed correctly by verifying the number of edges in the field of view.

**Example**

- Prevent dust or oil from adhering to the measurement unit, which can cause an abnormal measurement value.
- Detect the intrusion of a different type of target.
- Check that a measurement target falls within the measurement range.

# EASY SETTING WITH THE APPLICATION MODES

## Three major application modes

The measurement area is automatically specified simply by selecting the mode.

### Edge Control and Positioning Mode

The distance from the end of the measurement range to the edge of a target is measured.

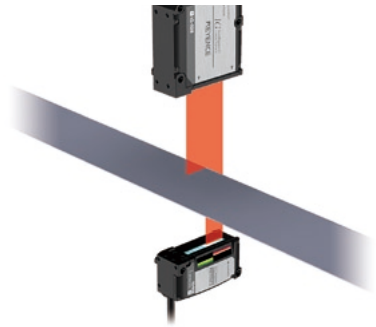

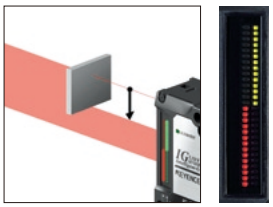

### Outer Diameter/ Width Measurement Mode

The outer diameter or width of a target is measured.

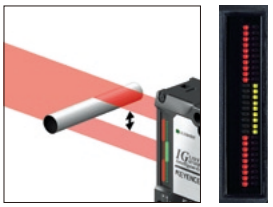

### Inner Diameter/ Gap Measurement Mode

The inner diameter of a target or a gap between targets is measured.

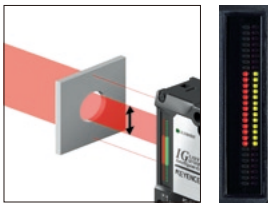

## Five dedicated modes can be selected according to the application

### Edge Detection of Transparent Targets

Edge detection algorithm + glass edge mode

The edges of transparent objects such as glass have low transparency which decreases the amount of light received. The IG Series detects edges exploiting this nature and automatically changes a measurement sensitivity appropriately to detect a transparent target.

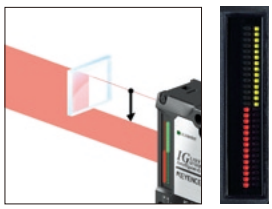

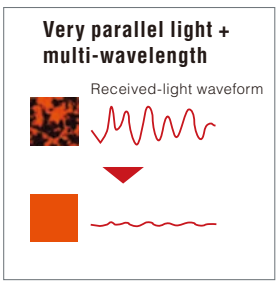


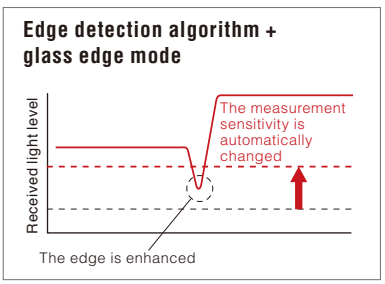


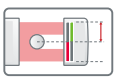

Pin position measurement mode

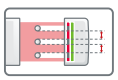

Pin pitch judgment mode

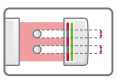

Pin diameter judgment mode

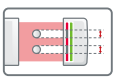

Specified edge-to-edge distance measurement mode

# BUILT-IN CALCULATION FUNCTIONS ALLOW FOR AN EVEN WIDER VARIETY OF APPLICATIONS

## Edge Control and Positioning Mode + Control output

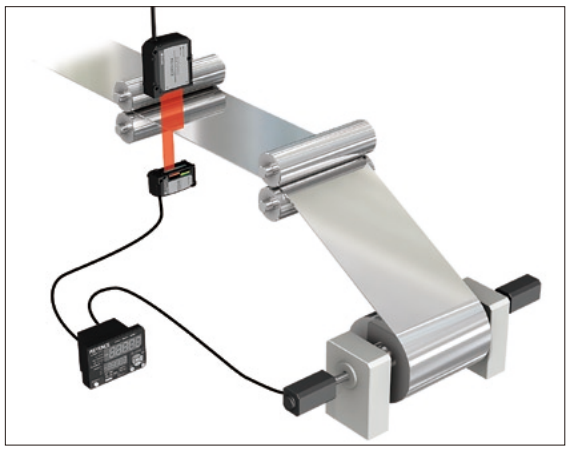

Feedback control using edge position control

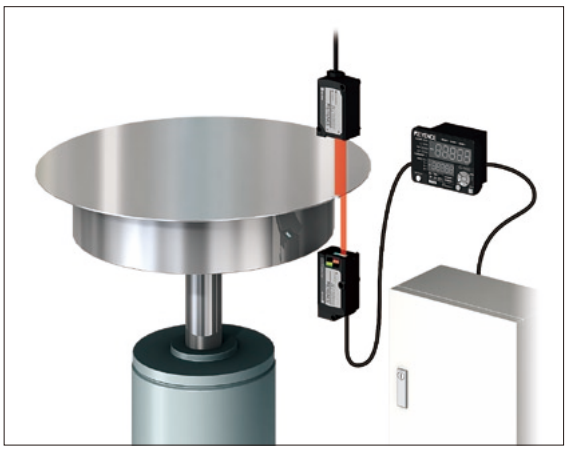

Positioning control of the θ angle of a wafer

### Easy control when used with a servomotor (example)

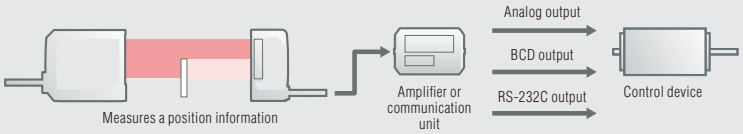


Outputs the edge position information to a control device. It is possible to send the information via an analog output, BCD output, or RS-232C output according to the type of the control device instead of using a PLC.

## Glass Edge Mode + Calculation function

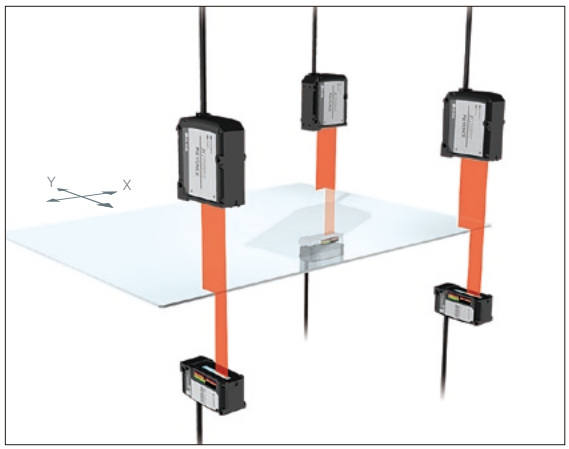


Positioning of a glass substrate

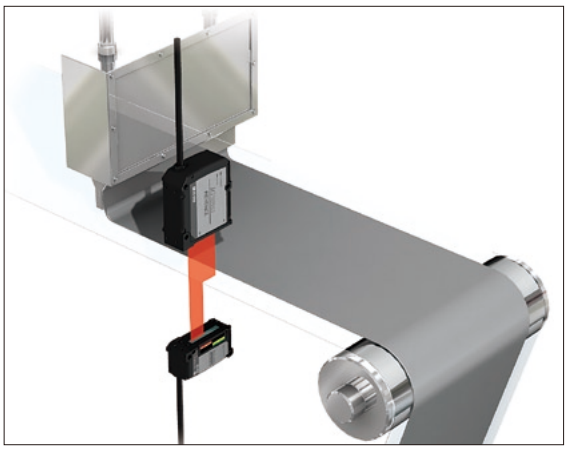

Edge control of a transparent sheet

### Easy measurement with the calculation function

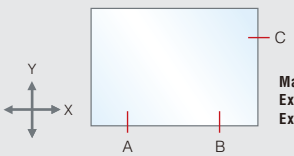


**Main unit** — **A–B :** Misalignment measurement
**Expansion unit 1** — **B :** Y-axis position measurement
**Expansion unit 2** — **C :** X-axis position measurement

The main unit of the amplifier can communicate with the expansion units. When positioning an object such as a panel, it is possible to calculate a misalignment amount by calculating the data obtained by two sensor heads.

## Outer Diameter/Width Measurement Mode + Calculation function

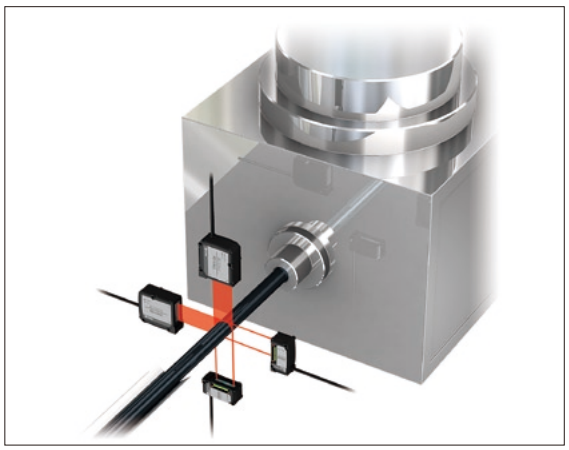

Outer diameter/deformation measurement an extrudate

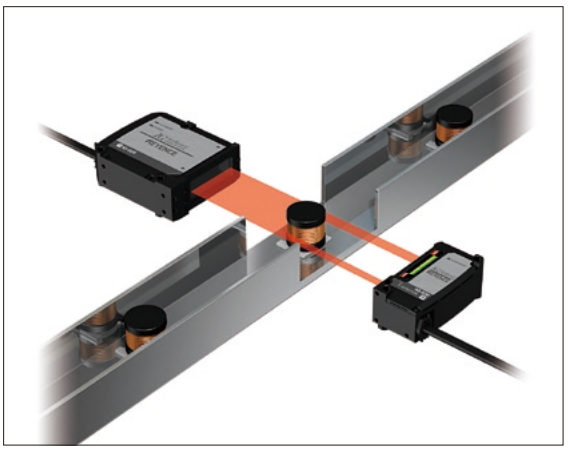

Outer diameter measurement of a part

**Easy measurement with the calculation function**

A-B: Deformation measurement
B : Outer diameter measurement

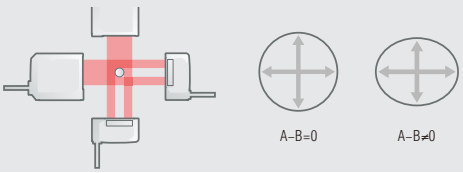


Abnormal diameters and deformations can be detected in real time by measuring a tube at two axes. The 980 µs high-speed sampling detects even tiny abnormalities.

## Inner Diameter/Gap Measurement Mode + Calculation function

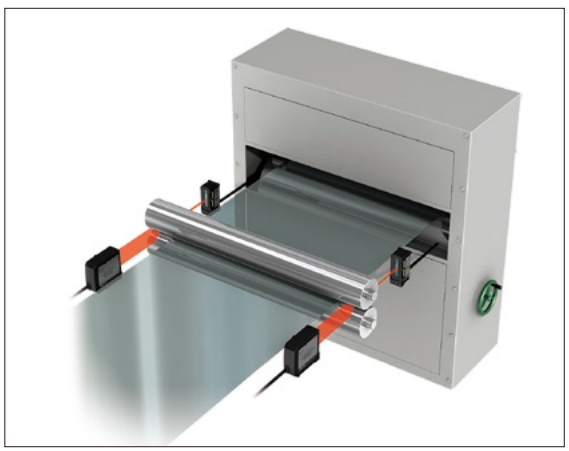

Gap measurement between rollers

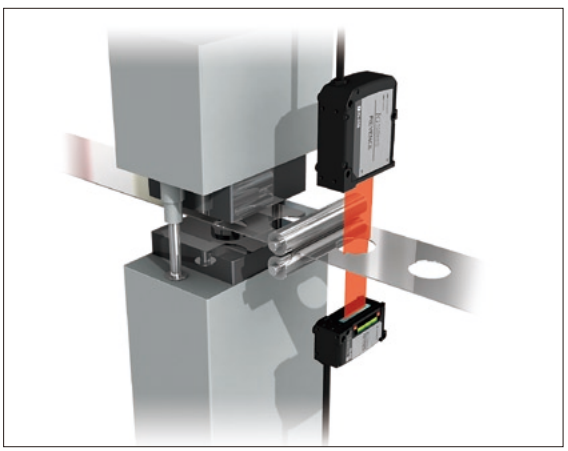

Diameter check of press cutting

**Easy measurement with the calculation function**

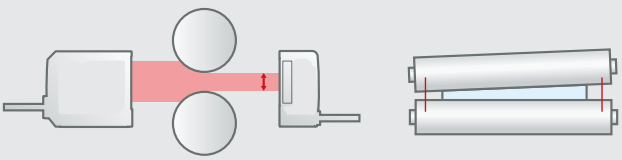

The thickness of a product can be controlled by measuring the gaps of the two sides between the rollers.

# EVEN MORE USEFUL WHEN CONNECTED TO A PC

The configuration software, IG Configurator, allows for a wide range of settings to be made including the monitoring of the waveforms of received light and the measurement modes.

## Reading and Writing Settings

The user can enter all settings including the measurement modes into a PC and then transfer them to the sensor. The management of setting data is simple and very convenient when two or more sensors are used.

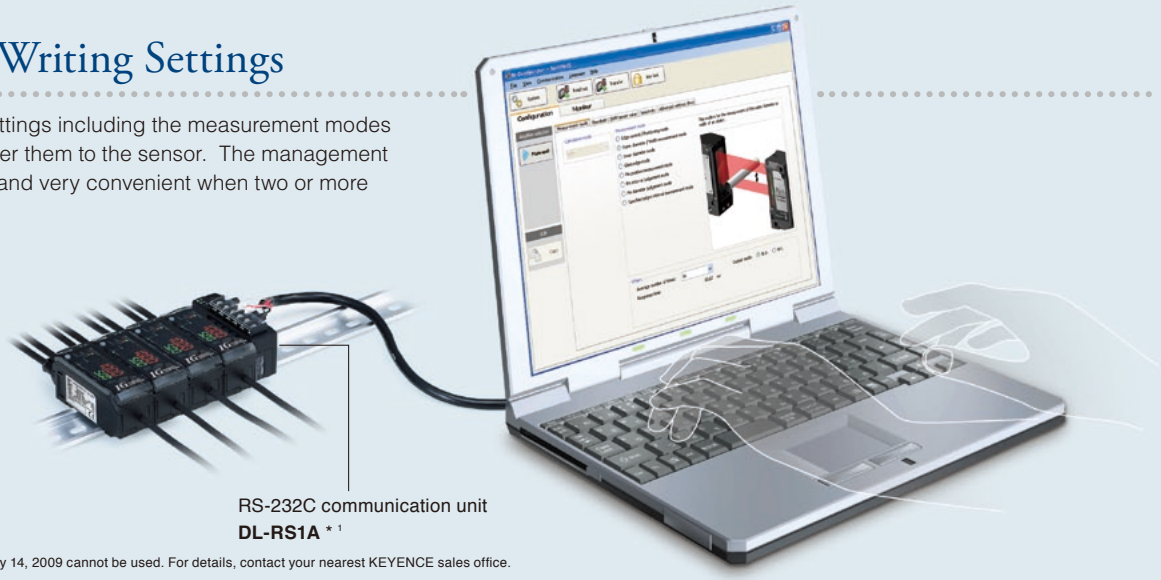


*1 DL-RS1A units purchased before July 14, 2009 cannot be used. For details, contact your nearest KEYENCE sales office.

## Monitoring Function

Measurement conditions such as the waveforms of received light can be displayed in real time. The mounting and sensitivity settings can also be adjusted more precisely.

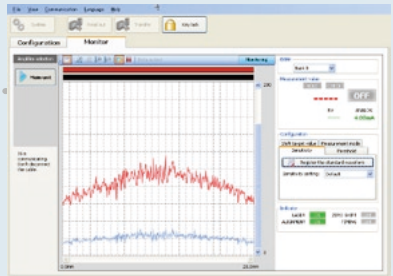

## Calculation Function

**Addition mode** (if a measurement target is large)

SETTING EXAMPLE 1
(length)

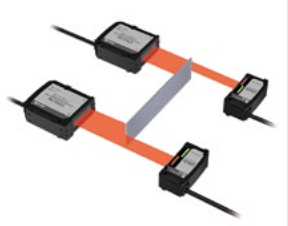

SETTING EXAMPLE 2
(width)

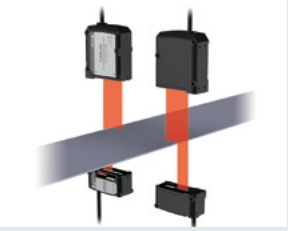

**Subtraction mode** (to measure the difference in level or inclination)

SETTING EXAMPLE 1
(inclination)

SETTING EXAMPLE 2
(difference in thickness)

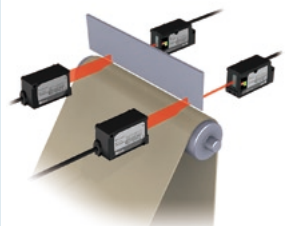

## Sensitivity Setting

The set value used to judge whether light enters or is blocked, based on the amount of light received by the CCD, is called the binarization level. The amount of light received when the reference waveform is registered is regarded as the 100% level. The light is judged to be blocked if the amount of light is less than the specified binarization level. The IG Series initially sets a binarization level of 25% and the user can change the level according to the application.

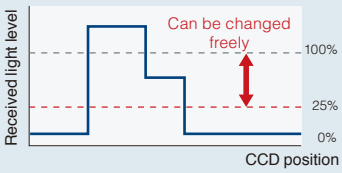


## Zero Shift Function

This function shifts an internal measurement value to 0 (to offset the value). When the target value is changed, this function can be used to shift an internal measurement value to the new target value.

# DATA COMMUNICATION

## Amplifier Function

### NPN/PNP Output Selection (judgment selection)

Both NPN and PNP outputs are supported. The outputs are set the first time the user turns on the power. These settings can subsequently be changed. Judgments are output as HIGH, GO, or LOW.

### Analog Output Selection

The following four types of analog outputs can be selected. The output is selected the first time the user turns on the power.

| Setting value | Description |
|---|---|
| oFF | Not output |
| 0-5u | Analog output after the judgement value is converted to the range from 0 to 5 V. |
| -5-5u | Analog output after the judgement value is converted to the range of ±5 V. |
| 1-5u | Analog output after the judgement value is converted to the range from 1 to 5 V. |
| 4-20r | Analog output after the judgement value is converted to the range from 4 to 20 mA. |

The setting can be changed.

### Bank Function

The bank function can register up to four patterns of specific settings.* For example, in response to a measurement target changeover, this function allows the user to easily switch between the patterns of registered settings.

* HIGH setting value, LOW setting value, binarization level, shift target value, etc.

## Communication Unit

### DL-RB1A BCD output unit

Use this unit when retrieving numerical data from the IG Series to an external device as digital data. A single communication unit can retrieve data from up to four IG Series display units in BCD.

### DL-RS1A RS-232C communication unit

Use this unit when outputting digital data to an external device with RS-232C signals. It is necessary to connect it to a PC when using the startup support software, IG Configurator. A single communication unit can retrieve data from up to four IG Series display units.

## Lineup

### Sensor heads

**IG-010**

| | |
|---|---|
| **Measurement range** | 10 mm 0.39" |
| **Mounting distance** | 0 to 1000 mm 39.37" |
| **Repetition accuracy** | 5 µm 0.20 Mil *1 (Setting distance: 100 mm 3.94") |
| **Linearity** | ±28 µm ±1.10 Mil *1 |

**IG-028**

| | |
|---|---|
| **Measurement range** | 28 mm 1.10" |
| **Mounting distance** | 0 to 1500 mm 59.06" |
| **Repetition accuracy** | 5 µm 0.20 Mil *1 (Setting distance: 100 mm 3.94") |
| **Linearity** | ±28 µm ±1.10 Mil *1 |

*1 For the detailed conditions, refer to "Specifications" (page 12).

### Display units (amplifiers)

**DIN rail mount type**

**IG-1000**
**Main unit**

**IG-1050**
**Expansion unit**

**Panel mount type**

**IG-1500**
**Main unit**

**IG-1550**
**Expansion unit**

### Sensor head cables

| Appearance | Cable length | Model | Weight |
|---|---|---|---|
| 1 cable included  | 2 m 6.56' *2 | **OP-87056** | Approx. 80 g |
| | 5 m 16.40' | **OP-87057** | Approx. 190 g |
| | 10 m 32.80' | **OP-87058** | Approx. 360 g |
| | 20m 65.62' | **OP-87059** | Approx. 680 g |

The cable is common to the transmitter and receiver, and can be used with either of them.
*2 Two cables are included with a sensor head.

This connector is required if the cable is cut.

Connector used to connect to a display unit (2 pcs.)
**OP-84338**

# Optional

| | Type | Model | Appearance | Description | Weight |
|---|---|---|---|---|---|
| PC software *1 | IG Configurator | IG-H1 | | – | Approx. 80 g |
| Sensor head mounting brackets *2 | For IG-010 | IG-TB01 |  | – | Approx. 50 g |
| | For IG-028 | IG-TB02 |  | – | Approx. 40 g |
| Optional accessories for the display unit | End unit (Optional) | OP-26751 |  | To connect an additional expansion unit, use the end units to secure the display units on both ends. When connecting additional units, be sure to use the end units. (2 pcs.) 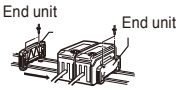  | Approx. 15 g |
| | Panel front protection cover [Included in panel mount type amplifier] | OP-87076 |  | The panel front protection cover and panel mounting bracket are included in the panel mount type amplifier. If the supplied cover or bracket is lost or damaged, purchase a new one. | Approx. 6 g |
| | Panel mounting bracket [Included in panel mount type amplifier] | OP-4122 |  | | Approx. 7 g |
| | Expansion cable: 300 mm 11.81" | OP-35361 |  | Extension cable used for panel mount type amplifier. Use this cable if the standard 50 mm 1.97" cable is not long enough. | Approx. 10 g |
| Optional accessories for the communication unit | | | | Although the DL Series is designed for the DIN-rail mount type only, the optional expansion cable (OP-35361, 300 mm 11.81") enables communication with the panel mount type display unit.  | |
| | DIN-rail mounting bracket | OP-60412 |  | The mounting bracket is used when the expansion cable is used to connect to the panel mount type display unit, in which case a DIN rail is not provided. | Approx. 12 g |

*1 The DL-RS1A communication unit is required.
*2 The screws for connecting the sensor head and bracket are included.

# Specifications

## Sensor heads

| Model | | IG-010 | IG-028 |
|---|---|---|---|
| Appearance | |  |  |
| Operation principle | | CCD method | |
| Light source | | Visible light semiconductor laser (Wavelength:660 nm) | |
| | FDA (CDRH) Part 1040.10 | Class 1*1 | |
| | IEC60825-1 | Class 1 | |
| Mounting distance | | 0 to 1000 mm 39.37" | 0 to 1500 mm 59.06" |
| Measurement range | | 10 mm 0.39" | 28 mm 1.10" |
| Sampling cycle | | 980μs (When the number of times for averaging is set to [hsp]: 490μs) | |
| Minimum detectable object *2 | High sensitivity mode | ø0.1 mm ø0.003" (Setting distance: 100 mm 3.94") | |
| | Standard mode | ø0.2 mm ø0.007" (Setting distance: 40 mm 1.57" or less),<br>ø0.5 mm ø0.02" (Setting distance: 500 mm 19.68") | ø0.2 mm ø0.007" (Setting distance: 50mm 1.97" or less),<br>ø0.5 mm ø0.02" (Setting distance: 500 mm 19.68") |
| Repeatability *3 | | 5 μm 0.20 Mil (Setting distance: 100 mm 3.94")<br>10 μm 0.39 Mil (Setting distance: 500 mm 19.68")<br>80 μm 3.15 Mil (Setting distance: 1000 mm 39.37") | 5 μm 0.20 Mil (Setting distance: 100 mm 3.94")<br>10 μm 0.39 Mil (Setting distance: 500 mm 19.68")<br>80 μm 3.15 Mil (Setting distance: 1000 mm 39.37")<br>140 μm 5.51 Mil (Setting distance: 1500 mm 59.06") |
| Linearity *4 | | ±0.3 % of F.S. (±28 μm ±1.10 Mil) | ±0.1 % of F.S. (±28 μm ±1.10 Mil) |
| Temperature characteristics *5 | | ±0.03 % of F.S./°C (±3 μm ±0.12 Mil/°C) | ±0.01 % of F.S./°C (±3 μm ±0.12 Mil/°C) |
| Operation indicator | Transmitter | Optical axis alignment indicator: Green LED<br>Power indicator: Green LED | |
| | Receiver | Optical axis alignment indicator: Green LED<br>Position monitor: Dual bar LED (Red, Green) | |
| Environment resistance | Enclosure rating | IP67 | |
| | Ambient temperature | -10 to +45°C 14 to 113F° (No freezing) | |
| | Ambient humidity | 35 to 85% RH (No condensation) | |
| | Ambient light *6 | Incandescent lamp: 5000 lux Sunlight: 5000 lux | |
| | Vibration resistance | 10 to 55 Hz Double amplitude 1.5 mm 0.06" XYZ each axis: 2 hours | |
| Material | Case | Zinc die-cast (Lower case), PBT (Upper case),<br>Polyarylate (PAR) (Display part), SUS304 (Metallic part) | |
| | Lens cover | Glass | |
| | Cable | PVC | |
| Supplied item | | Transmitter × 1, Receiver × 1, Sensor head cables (2 m 0.08") × 2 | |
| Weight (including supplied items) | | Approx. 380 g | Approx. 500 g |

*1 The classification for FDA (CDRH) is implemented based on IEC60825-1 in accordance with the requirements of Laser Notice No.50.
*2 When the measurement target object is measured at the center position of the setting distance.
When the measurement mode is set to the glass edge mode, a glass edge of C0.1 mm 0.003" or more can be detected (Setting distance: 500 mm 19.69").
*3 When the light is shielded by half at the center position of the setting distance. Vibration width when the average number of times is set to 16 and sampling is performed for 30 seconds.
(When the analog output is used, the margin of error of analog output is added.)
*4 When the setting distance is 100 mm 3.94" and light is shielded at 50 mm 1.96" position from the receiver. Margin of error to the ideal line.
*5 When the setting distance is 100 mm 3.94" and light is shielded by half at 50 mm 1.96" position from the receiver.
*6 Excluding when the average number of times is set to [hsp].

## Display unit (amplifier)

| Model | | IG-1000 | IG-1050 | IG-1500 | IG-1550 |
|---|---|---|---|---|---|
| Appearance | |  |  |  |  |
| Amplifier type | | DIN rail mount | | Panel mount | |
| Main unit/Expansion unit | | Main unit | Expansion unit | Main unit | Expansion unit |
| Analog output | | Yes | No | Yes | No |
| Power supply voltage | | 10-30 VDC, Ripple (P-P): 10% included, Class 2 | | | |
| Power consumption (including analog current output) | Normal | 2700 mW or less (at 30 V: 90 mA or less) | | 2880 mW or less (at 30 V: 96 mA or less) | |
| | Power saving function (HALF) | 2300 mW (at 30 V: 77 mA or less) | | | |
| | Power saving function (ALL) | 2200 mW (at 30 V: 74 mA or less) | | | |
| Digital display method | | Dual 7-seg display<br>Upper level: Red, 5 digits<br>Lower level: Green, 5 digits | | Dual 7-seg display<br>Upper level: Red/Green, 2 colors, 5 digits<br>Lower level: Green, 5 digits | |
| Display range | | -99.999 to +99.999, -99.99 to +99.99, -99.9 to +99.9, -99 to +99 (selectable) | | | |
| Display resolution | | 1 µm 0.04 Mil, 10 µm 0.39Mil, 100 µm 3.94 Mil, 1000 µm 39.37 Mil(selectable ) | | | |
| Output | Judgement output (selectable between NPN and PNP) | NPN (PNP) open collector x3ch, 30 VDC (Power supply voltage) or less, residual voltage 1 V (2 V) or less, N.O./N.C. selectable Max. 50 mA/ch *1 | | | |
| | Response time (judgement output) | 1.96 to 4031.72 ms *2 | | | |
| | Edge check output (selectable between NPN and PNP) | NPN (PNP) open collector x1ch, 30 VDC (Power supply voltage) or less, residual voltage 1 V (2 V) or less, N.O./N.C. selectable Max. 50 mA,*1 response time 20 ms | | | |
| | Analog output (selectable among ±5V, 1-5 V, 0-5 V, 4-20 mA) | | | | |

| | Voltage output | Current output |
|---|---|---|
| Output range | ±5 V (full scale 10 V) | 4-20 mA (full scale 16 mA) |
| Output resistance | 100 Ω | – |
| Maximum load resistance | – | 350 Ω |
| Repetition accuracy | ±1 mV | ±1.5 µA |
| Display accuracy | ±0.05 % of F.S. | ±0.25 % of F.S. |
| Temperature characteristics | ±0.005 % of F.S./°C | ±0.01% of F.S./°C |
| Update cycle | Same as sensor head sampling cycle | |
| Response time | Same as Response time (judgement output) | |
| Time constant *3 | 10 µs (90 % response) | 30 µs (90 % response) |

| | | |
|---|---|---|
| Input | Gain input | Input time: 20 ms or more, Response delay time: 120 ms or less (Nonvolatile memory (EEPROM) 1.5 s or less) |
| | Reset input | Input time: 20 ms or more, Response delay time: 20 ms or less |
| | Timing input | Input time: 2 ms or more, Response delay time: 2 ms or less |
| | Zero shift input | Input time: 20 ms or more, Response delay time: 20 ms or less |
| | Bank A input/Bank B input | Input time: 20 ms or more, Response delay time: 20 ms or less *2 |
| | Laser emission stop input | Input time: 2 ms or more, Response delay time: 2 ms or less |
| Environment resistance | Ambient temperature | -10 to +50°C 14 to 122F° (No freezing) |
| | Ambient humidity | 35 to 85%RH (No condensation) |
| | Vibration resistance | 10 to 55 Hz Double amplitude 1.5 mm 0.06" XYZ each axis: 2 hours |
| | Pollution degree | 2 |
| Material | | Main unit case/Front sheet: Polycarbonate, Key top: Polyacetal, Cable: PVC |
| Supplied item | | Main body × 1, Instruction manual × 1 (only for main unit) / Main body × 1, Panel mounting bracket × 1, Front protection cover × 1, Power supply and input/output cable (2 m 0.08") × 1, Expansion cable (50 mm 1.97") × 1 (only for expansion unit), Instruction manual × 1 (only for main unit) |
| Weight (including supplied items) | | Approx. 150 g / Approx. 140 g / Approx. 170 g / Approx. 165 g |

*1 When expansion units are added: Max. 20 mA/ch
*2 For more details, refer to the User's Manual.
*3 Delay time that occurs from the analog output circuit after the judgment is output.

## Communication unit (Common specifications)

| Model | | DL-RB1A | DL-RS1A |
|---|---|---|---|
| Appearance | |  |  *2 |
| Power supply voltage | | 20 to 30 VDC, including ripple, Ripple (P-P): 10% max. (Supplied via connected sensor amplifier) | |
| Power consumption (including analog current output) | | 27 mA max. | 25 mA max. |
| Number of connectable sensor amplifiers | | Up to 4 units (including main unit) *1 | |
| Indicator | | Alarm indicator lamp (red), Power indicator lamp (green) | Communication indicator lamp (green × 2), Alarm indicator lamp (red), Power indicator lamp (green) |
| Communication method | | – | Full duplex |
| Synchronization method | | – | Start-stop |
| Transmission code | | – | ASCII |
| Baud rate | | – | 2400/4800/9600/19200/38400 bps selectable (Factory-setting: 9600 bps) |
| Data bit length | | – | 8 bits/7 bits selectable (Factory-setting: 8 bits) |
| Parity check | | – | None/Even/Odd selectable (Factory-setting: None) |
| Stop bit length | | – | 1 bit |
| Data delimiter | | – | Data reception: automatically recognizes CR or CR+LF<br>Data transmission: Fixed to CR+LF |
| Environment resistance | Ambient temperature | -10 to +55°C 14 to 131F° (No freezing) | |
| | Ambient humidity | 35 to 85%RH (No condensation) | |
| | Vibration resistance | 10 to 55 Hz Double amplitude 1.5 mm 0.06" XYZ each axis: 2 hours | |
| Material | | Main unit case/Front sheet: Polycarbonate | |
| Weight | | Approx. 46 g | Approx. 53 g |
| Supplied item | | Instruction manual, End units × 2, Switch protection seal, Expansion connector cover | |

*1 A single communication unit can retrieve data from up to 4 display units.
*2 DL-RS1A units purchased before July 14, 2009 cannot be used.

# Dimensions

Unit : mm inch

## Sensor head

### IG-010

Transmitter

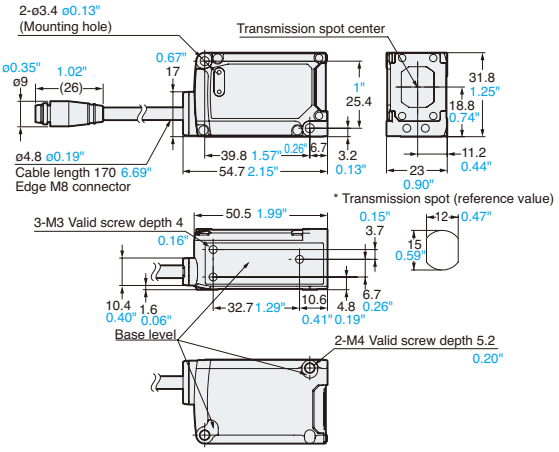


Receiver

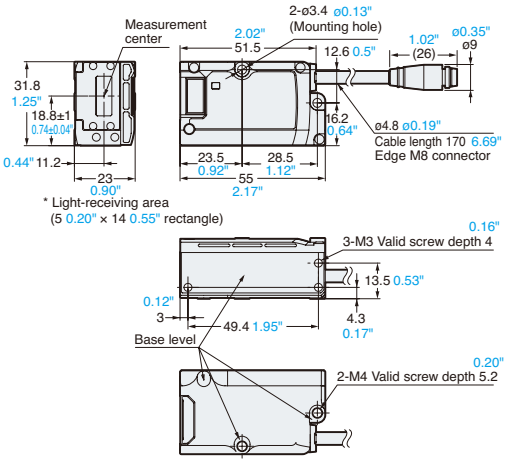


### IG-028

Transmitter

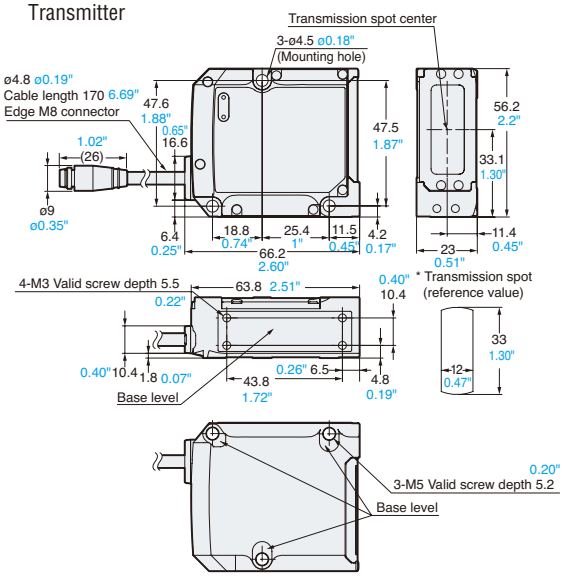


Receiver

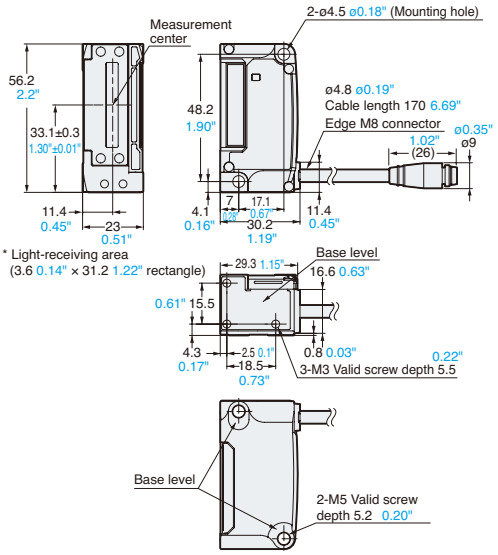


## Sensor head mounting bracket

### IG-TB01 + IG-010

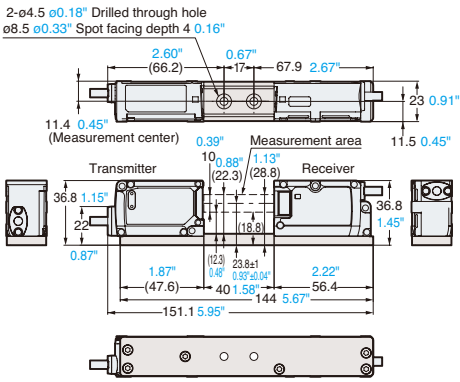


### IG-TB02 + IG-028

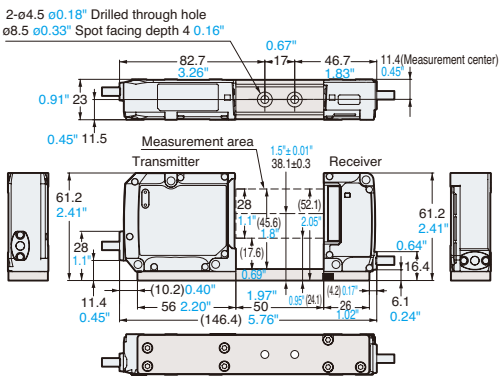

# Dimensions

Unit : mm inch

## Sensor amplifier (DIN rail mount type)

### IG-1000/IG-1050

**IG-1000**

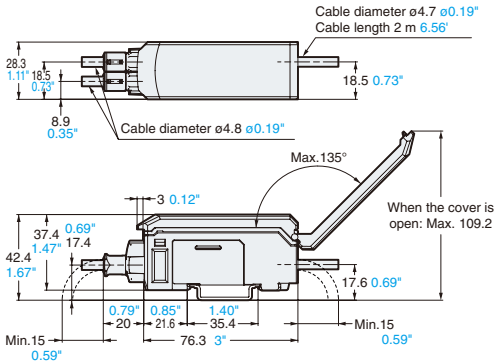


**IG-1050**

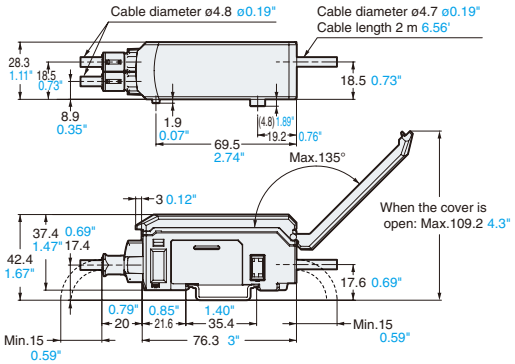


## Sensor amplifier (Panel mount type)

### IG-1500/IG-1550

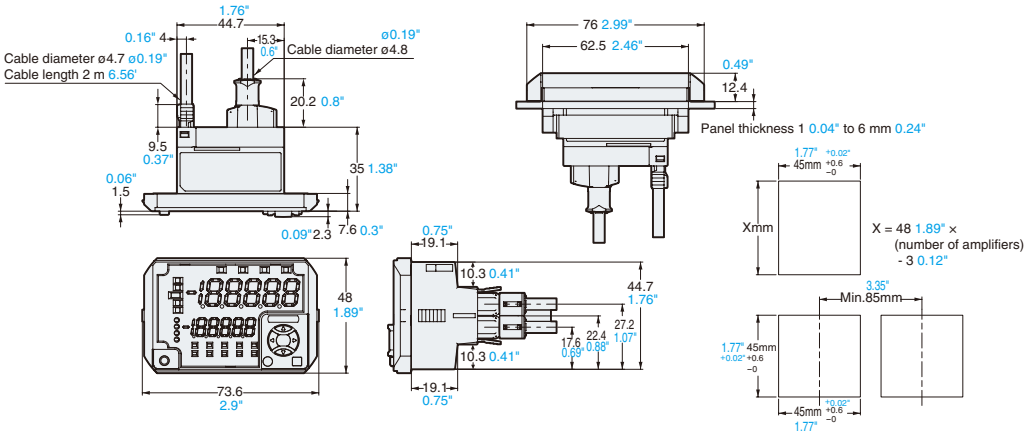


**Notes on connecting a panel mount type expansion unit**

Place the main unit in the top position, and bring the expansion unit into contact with the main unit vertically. For horizontal connection of the panel mount type, the optional expansion cable OP-35361 (300 mm) 11.8" type is required.

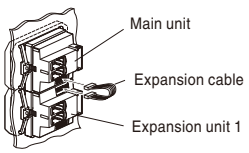


## End unit (Optional) (2 pcs.)

### OP-26751

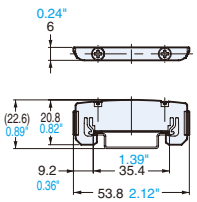


# Wiring Diagram

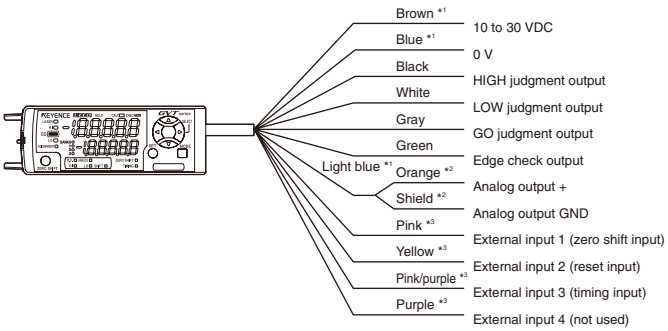


*1 The brown, blue, and light blue cables are not provided in a IG-1050/IG-1550 unit (expansion unit). The power is supplied to the expansion unit from the IG-1000/IG-1500 unit (main unit).
*2 For an analog output, OFF (not used), 0 to 5 V, ±5 V, 1 to 5 V, or 4 to 20 mA can be selected.
*3 For an external input, bank A input, bank B input, laser emission stop input, or OFF (not used) can also be selected.
For external input 4, gain input can also be selected.
For details, refer to the User's Manual.

# Dimensions

Unit : mm inch

## Communication unit (BCD output type)

### DL-RB1A

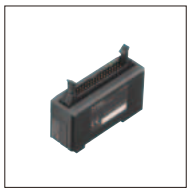

34-pin MIL connector

**DIN-rail mount**

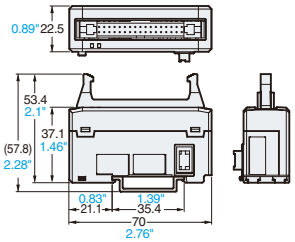


**When the mounting bracket is attached OP-60412 (Optional)**

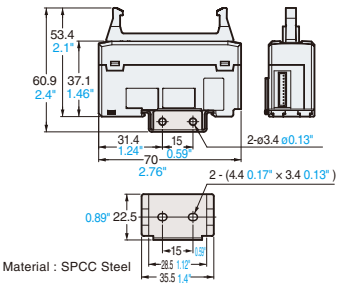


Material : SPCC Steel

## Communication unit (RS-232C communication type)

### DL-RS1A

**DIN-rail mount**

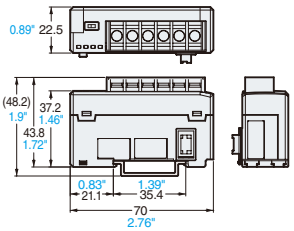


**When the mounting bracket is attached OP-60412 (Optional)**

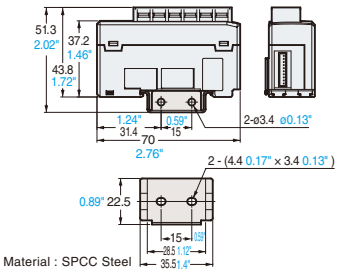


Material : SPCC Steel

### ■ Judgment output/edge check output

When NPN output is selected

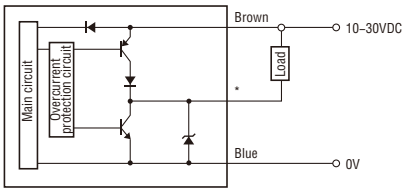


* Black (HIGH judgement output) / White (LOW judgement output) / Gray (GO judgement output) / Green (edge check output)

When PNP output is selected

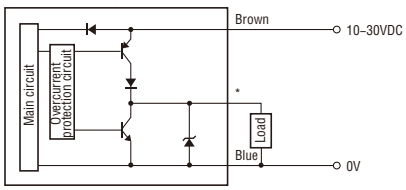


* Black (HIGH judgement output) / White (LOW judgement output) / Gray (GO judgement output) / Green (edge check output)

### ■ Input

When NPN output is selected

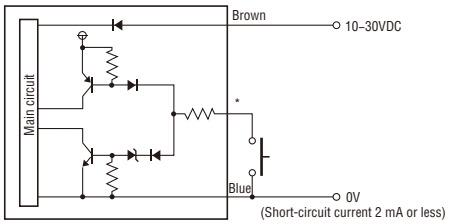


* Pink (External input 1)/Yellow (External input 2) / Pink·Purple(External input 3)/ Purple (External input 4)

When PNP output is selected

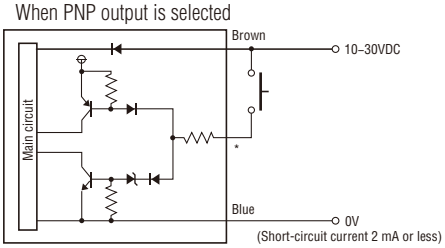


* Pink (External input 1)/Yellow (External input 2)/ Pink·Purple(External input 3)/ Purple (External input 4)

### ■ Analog current/voltage output

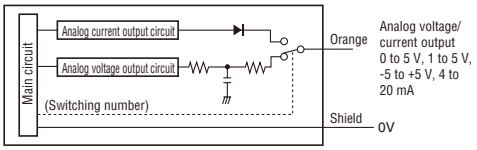





**KEYENCE CORPORATION OF AMERICA**

**Corporate Office** 50 Tice Blvd., Woodcliff Lake, NJ 07677 PHONE: 201-930-0100 Fax: 201-930-0099 E-mail: keyence@keyence.com

**■ Regional offices**

| | | | | | | | | | | | | | | | | | |
|---|---|---|---|---|---|---|---|---|---|---|---|---|---|---|---|---|---|
| **AL** | Birmingham | **CO** | Denver | **IN** | Indianapolis | **MI** | Detroit | **NJ** | Woodcliff Lake | **OH** | Cincinnati | **SC** | Greenville | **VA** | Richmond |
| **CA** | N.California | **FL** | Tampa | **KS** | Kansas City | **MI** | Grand Rapids | **NY** | Rochester | **OH** | Cleveland | **TN** | Nashville | **WA** | Seattle |
| **CA** | Los Angeles | **GA** | Atlanta | **KY** | Louisville | **MN** | Minneapolis | **NC** | Charlotte | **OR** | Portland | **TN** | Knoxville | | |
| | | **IL** | Chicago | **MA** | Boston | **MO** | St. Louis | **NC** | Raleigh | **PA** | Philadelphia | **TX** | Dallas | | |

**KEYENCE CANADA INC.**

**Head Office** PHONE: 905-696-9970 Fax: 905-696-8340 E-mail: keyencecanada@keyence.com
**Montreal** PHONE: 514-694-4740 Fax: 514-694-3206

**KEYENCE MEXICO S.A. DE C.V.**

PHONE: +52-81-8220-7900 Fax: +52-81-8220-9097
E-mail: keyencemexico@keyence.com

**KEYENCE GLOBAL HEADQUARTERS**

1-3-14, Higashi-Nakajima, Higashi-Yodogawa-ku, Osaka, 533-8555, Japan PHONE: +81-6-6379-2211



KA1-1010





IG-KA-C-E 1040-3 611275 Printed in Japan